HYDRAULIC STEERING SYSTEMS

TWIN DISC®

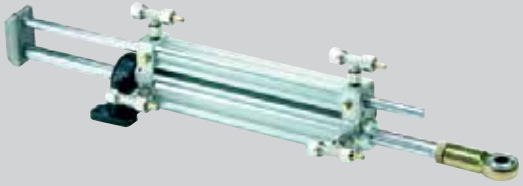

CATERPILLAR
CATERPILLAR

INDEX

Company Profile and Introduction	2-5
Hydraulic Steering Systems Composition and Working Principle	6-7
Helm Pumps	8-13
Heavy Duty Helm Pumps	14-16
Systems 1-14	17-30
Inboard Steering Cylinders	31-33
Inboard Heavy Duty Cylinders	34-36
Manual Inboard Steering Systems Order Guide	37
Autopilot Power Units	38-42
Autopilot Order Guide	43-44

Power-Assisted Inboard Steering Systems Features and Working Principle	45-46
Power-Assisted Inboard Cylinders	47-49
Power-Assisted Electro-Hydraulic Power Units	50
Power-Assisted Steering System Applications and Systems	51-55
Power-Assisted Steering System: Big Range	56
Steering System for Catamarans	57
Hydrostatic Steering Systems with Engine-Driven Pumps	58
Accessories	59-60
Fittings	61-62
International Distributors	back cover

NOTE: Twin Disc Srl declines any liability for possible mistakes in this catalogue due to printing errors and reserves the right to make any modification that is considered to be necessary or useful for its products. Publishing rights, trade marks, part numbers and photographs present on this catalogue are Twin Disc Srl property or it has the necessary authorization to use them. So, all rights are reserved and any reproduction, even partial, is forbidden. Our products cannot be installed on racing boats without our previous authorization.

High Quality, Complete Solutions

Throughout our nearly sixty years of experience, BCS has become a leading company in the production and worldwide distribution of high quality marine equipment. The acquisition by Twin Disc, Inc. – leader in several different areas such as marine and industrial, heavy duty transmissions and the oil extraction industry – has consolidated its position on the market as part of a multinational group.

Twin Disc SRL combines BCS, BCS Service, Twin Disc Technodrive and Twin Disc Propulsion. Twin Disc SRL is also supported by a sister-company, Rolla SP Propellers.

Global 'Package'
Twin Disc SRL offers to boat builders and design engineers a complete "package" of products, from propulsion systems to gearboxes and transmissions up to control and steering systems, together with customized solutions and efficient technical support. Also global customer service for the development and realization of the whole kinematics system.

A dynamic team of engineers, technicians and professional people is devoted to support the customer in any step: from concept of the project to the planning, through prototype development and design definition, up to bench and field testing, production, assembly, installation and service also on board.

Production plant in Limite sull'Arno

Twin Disc SRL works alongside the customer every day. We have established a unique worldwide system dedicated to the marine industry based on our ability to acknowledge and anticipate market requests, the certified reliability of our products, skilled service and the continuous research of technological innovation.

The production plant of Limite sull' Arno produces equipment covering several application fields: Hydraulic and electronic steering systems, complete shaft lines for boats up to 40 meters, trim tab systems in stainless steel or aluminum, electric and hydraulic bow and stern thrusters, electrohydraulic gangways and side ladders for large applications, as well as a large variety of stainless steel hydraulic actuators and multi-function electrohydraulic power units.

From concept to production:
prototype development, care for design, field testing, product definition

Twin Disc SRL is certified by Registro Italiano Navale (RINA) according to the requirements of the standards UNI EN ISO 9001:2000.

All the management and production processes of the company, from the material research and the design of products, to the planning of the production cycles, checking tests and shipping management, undergo the constant verification of the strictest quality criteria in order to guarantee the highest reliability level.

As a result of more than 50 years of experience, our steering systems are a synthesis between selected materials, innovative design and state-of-art technical solutions.

All components are built with high precision systems and tooling and meet the requirements of the best survey authorities such as: Rina Lloyd's Register, ABS, Bureau Veritas etc. As a further guarantee of efficiency and durability, certificates for special applications are also available upon request.

Conforming with "the Standard 94/25/CE", as amended by "the Standard 2003/44/CE", and also included in the Type Accepted of Program NMMA, the Twin Disc line of hydraulic pumps and cylinders covers any type of application: outboard, stern-drives and inboard systems for pleasure and commercial vessels.

Highly versatile, Twin Disc steering systems are available for use in pleasure and commercial applications, as well as mega yachts.

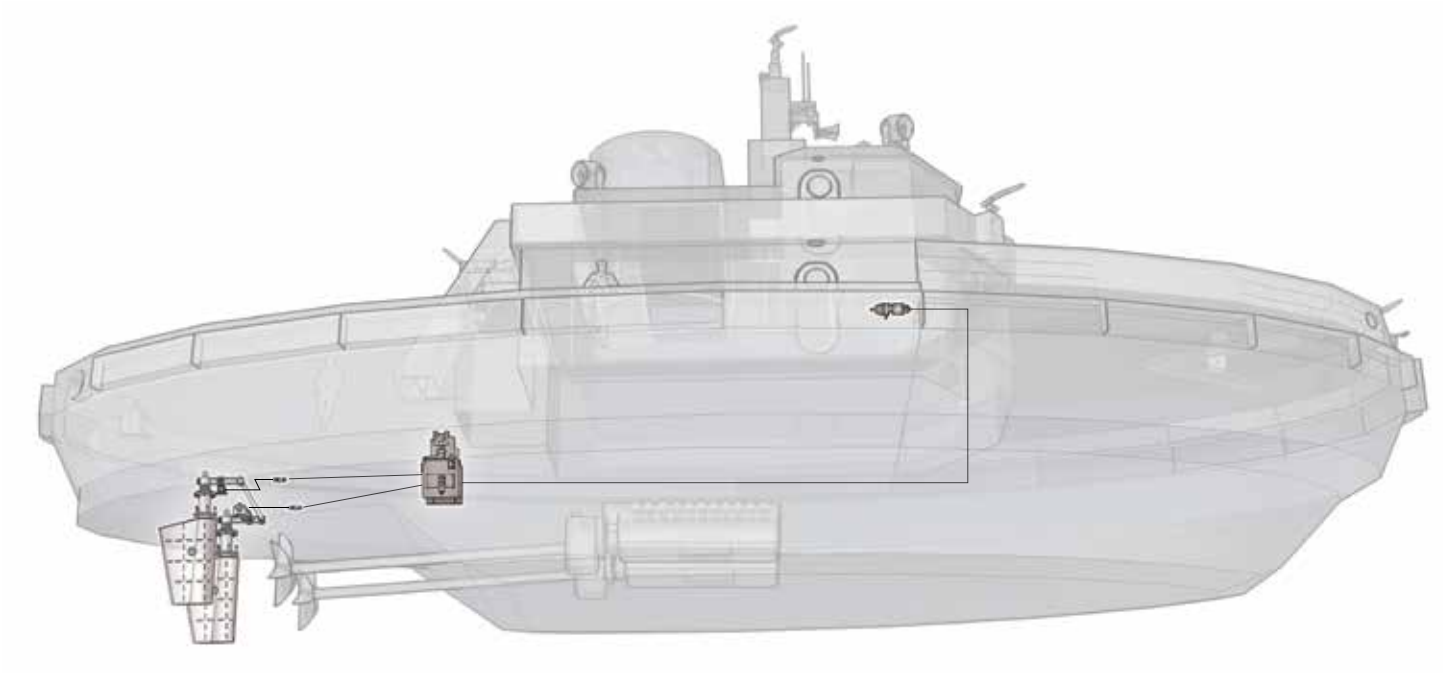

COMMERCIAL

HYDRAULIC STEERING SYSTEMS

COMPOSITION AND WORKING PRINCIPLE

In order to get the best control with the minimum effort, the steering system must match the specific vessel's requirements. A standard steering system in its basic composition includes major elements such as:

- Hydraulic helm pump of the axial piston type, which pumps oil into the system each time the steering wheel is turned. The pump is provided with a non-return (lock) valve to prevent any movement of the rudder or the outboard engine when the pump is not controlled, and with a relief valve to protect the steering system from any sudden and excessive pressure increase.
- Hydraulic cylinder, which is the real rudder actuator and determines the power of the system. It is extremely important to select the right cylinder model suitable for the torque required.

The pump and the cylinder are connected together by means of:

- Rigid or flexible hoses suitable for hydraulic applications and sized according to the pump displacement. The rigid piping guarantees the best steering performances, but it is also possible to use flexible hose for rudder torque not higher than 290 Kg/m (24.675 in/lb).

To satisfy different needs, or adapt to specific solutions, this basic configuration can be integrated with many other steering components such as:

- Hydraulic helm pumps for additional control stations
- Autopilot power unit, available in a wide range of displacements for combination with steering cylinders having a volume up to 3900 cc
- Many types of valve or accessories (see pages 59-60)

The working principle of the basic steering system is very simple:

A. Turning the steering wheel in the direction desired sends an oil flow from the helm pump to the steering cylinder.
B. This flow, which enters the cylinder, moves the piston, as well as the rod connected to the tiller arm, thus causing the rudder to rotate.
C. Oil displaced from the opposite side of the cylinder flows back to the helm pump.
D. To rotate the rudder in the opposite direction, simply turn the helm pump the other way.

Note: In case of dual station, the oil cap of the pilot house shall be closed. If a power unit with automatic filling is installed both caps shall be closed.

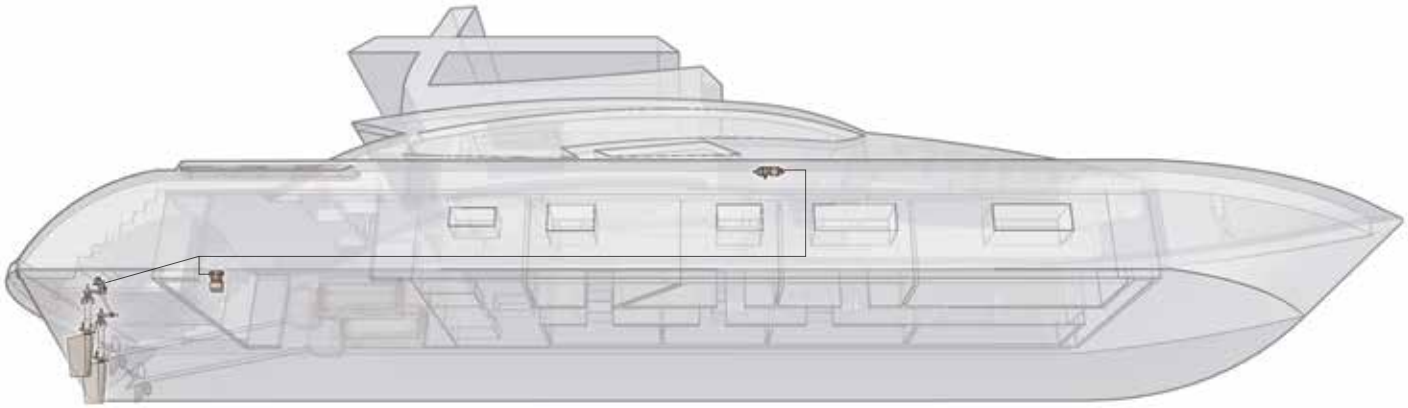

PLEASURE CRAFT

HELM PUMPS

Completely redesigned, the new line of Twin Disc helm pumps has a range of models in different displacements, as well as a variety of configurations and mounting options. A compact design with minimal helm protrusion is one of the main features of this axial-piston pump, which has been specifically designed to respond to various drive conditions and ensure smooth and light control.

The Twin Disc steering helm is made of a high-strength cast aluminum housing that is corrosion and abrasion resistant. Also supplied is a lock valve, which prevents any possible rudder feedback, while a relief valve protects the steering components from over-pressure.

Twin Disc steering helms are available in numerous mounting configurations that allow the pump to be installed at various positions on the console. The Basic version, which is normally mounted outside on the dash surface and with the steering shaft perpendicular to it, can be combined with different mounting kits allowing the helm protrusion to be reduced or even disappear behind the dash.

A Sport Tilt mechanism is available for Twin Disc steering helms for a more comfortable driving position (mounting angles other than 90 degrees).

Features

- Compact design
- Wide range of displacements: 20 cc – 25 cc – 30 cc – 35 cc – 42 cc
- Variety of mounting configurations: Front, Intermediate, Rear and with Sport Tilt
- Built-in lock valve to prevent any rudder feedback
- Built-in relief valve to protect the system from over-pressure
- Cast aluminium housing for a high corrosion resistance
- Pump shaft with ABYC 3/4 taper
- Easy installation
- Built according to quality criteria and CE approved
- Provided with elbow fittings of 1/4” NPT for 3/8” hose (For 42 cc helm pump and d. 1/2” hose)
- Provided with no-bleeder cap for additional control station
- NMMA Type Approved

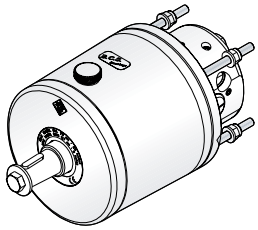

Frontal Mount Helm
(Basic Helm)

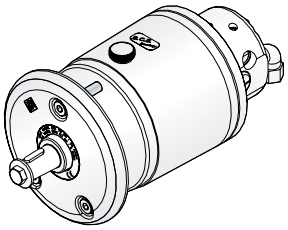

Basic Helm
+ Rear Mount Kit

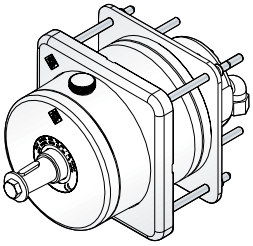

Basic Helm
+ Intermediate Mount Kit

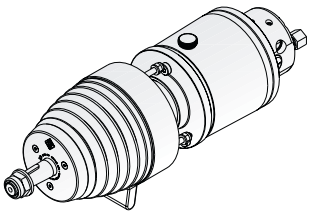

Helm with Sport Tilt

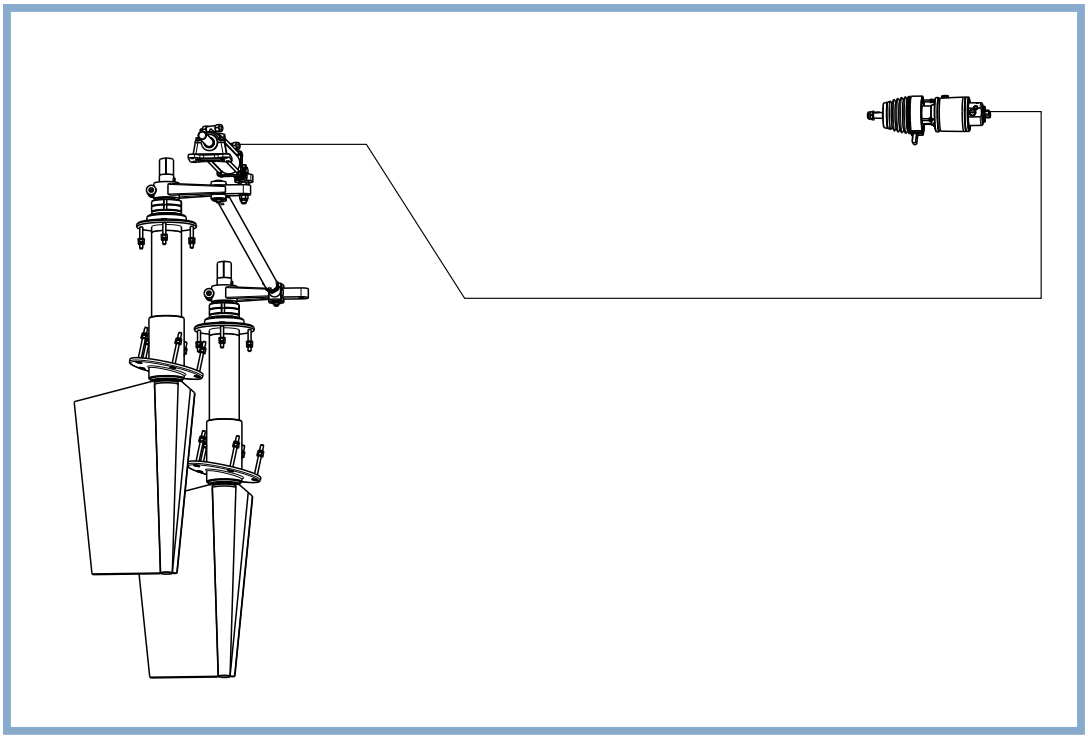

HELM PUMPS 20 CC - 30 CC - 42 CC

- FRONTAL MOUNTING - BASIC HELM

Mounting Configuration

Frontal Mounting

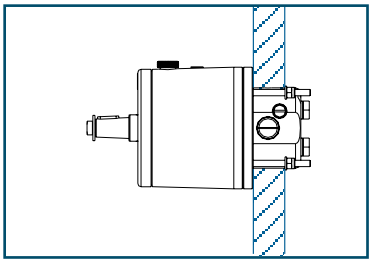

Order Guide

HELM PUMP		
Model	Displacement	Code
P20BAP P20BA	20 cc/rev 1.22 cu.in/rev	IT21173 IT16192
P30BAP P30BA	30 cc/rev 1.83 cu.in/rev	IT21174 IT16193
P42BAP P42BA	42cc/rev 2.56 cu.in/rev	IT21175 IT16194

TECHNICAL SPECIFICATIONS

Model	Mounting Configuration	Non-return valve	Relief valve	Displacement	# of pistons	Relief valve setting pressure	Fittings included	Min. wheel diameter	Max. wheel diameter	Weight
P20BAP P20BA	Frontal	Yes	Yes	20 cc/rev 1.22 cu.in/rev	5	70 bar 1000 psi	1/4"NPTF - 3/8" D.E. G1/4'' - hose d. 10	350 mm 13,78 in.	711 mm 28 in.	2.6 Kg 5.8 lb
P30BAP P30BA	Frontal	Yes	Yes	30 cc/rev 1.83 cu.in/rev	5	70 bar 1000 psi	1/4"NPTF - 3/8" D.E. G1/4'' - hose d. 10	350 mm 13,78 in.	711 mm 28 in.	3.0 Kg 6.7 lb
P42BAP P42BA	Frontal	Yes	Yes	42 cc/rev 2.56 cu.in/rev	7	70 bar 1000 psi	1/4"NPTF - 3/8" D.E. 1/4"NPTF - 1/2" D.E. G1/4'' - hose d. 10 G1/4'' - hose d. 12	450 mm 17,72 in.	711 mm 28 in.	3.0 Kg 6.7 lb

NOTE: The Twin Disc 20 cc-30 cc-42 cc helm pumps are provided with inch fittings. Versions with metric fittings are also available.

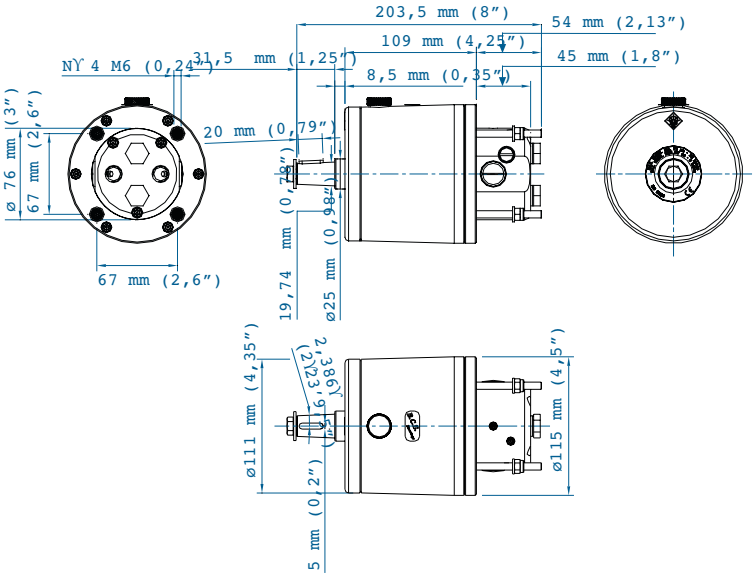

HELM PUMPS 20 CC - 30 CC - 42 CC

• REAR MOUNTING

Mounting Configuration

Rear Mounting

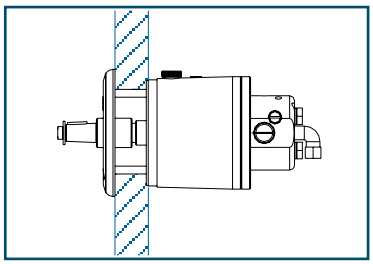

Order Guide

HELM PUMP		
Model	**Displacement**	**Code**
P20BAP + Kit MK30 P20BA + Kit MK30	20 cc/rev 1.22 cu.in/rev	IT21173+IT16198 IT16192+IT16198
P30BAP + Kit MK30 P30BA + Kit MK30	30 cc/rev 1.83 cu.in/rev	IT21174+IT16198 IT16193+IT16198
P42BAP + Kit MK30 P42BA + Kit MK30	42 cc/rev 2.56 cu.in/rev	IT21175+IT16198 IT16194+IT16198

TECHNICAL SPECIFICATIONS

Model	Mounting Configuration	Non-return valve	Relief valve	Displacement	# of pistons	Relief valve setting pressure	Fittings included	Min. wheel diameter	Max. wheel diameter	Weight
P20BAP + MK30 P20BA + MK30	Rear	Yes	Yes	20 cc/rev 1.22 cu.in/rev	5	70 bar 1000 psi	1/4"NPTF - 3/8" D.E. G1/4'' - hose d. 10	350 mm 13,78 in.	711 mm 28 in.	2.6 Kg 5.8 lb
P30BAP + MK30 P30BA + MK30	Rear	Yes	Yes	30 cc/rev 1.83 cu.in/rev	5	70 bar 1000 psi	1/4"NPTF - 3/8" D.E. G1/4'' - hose d. 10	350 mm 13,78 in.	711 mm 28 in.	3.0 Kg 6.7 lb
P42BAP + MK30 P42BA + MK30	Rear	Yes	Yes	42 cc/rev 2.56 cu.in/rev	7	70 bar 1000 psi	1/4"NPTF - 3/8" D.E. 1/4"NPTF - 1/2" D.E. G1/4'' - hose d. 10 G1/4'' - hose d. 10	450 mm 17,72 in.	711 mm 28 in.	3.0 Kg 6.7 lb

NOTE: The Twin Disc 20 cc - 30 cc - 42 cc helm pumps are provided with inch fittings. Versions with metric fittings are also available.
Please specify when placing the order. For this pump model it is suggested the purchase of the filling kit mod. K100 (oil filling kit code IT18599).
See page 59.

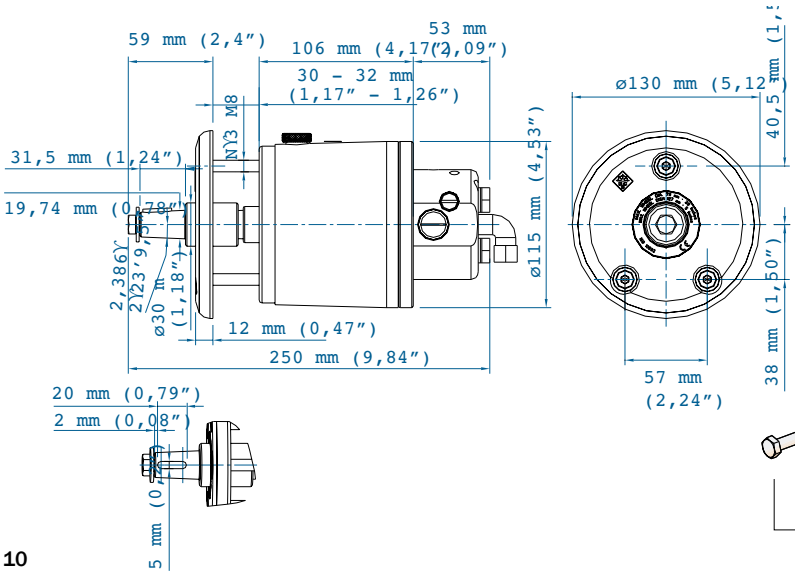

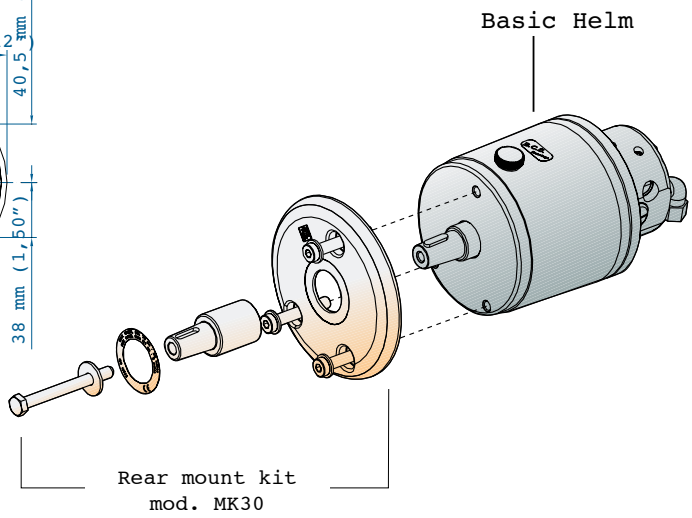

HELM PUMPS 20 CC - 30 CC - 42 CC

- REAR MOUNTING

Mounting Configuration

Rear Mounting

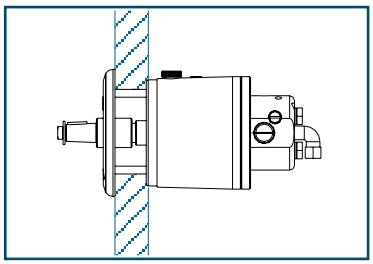

Order Guide

HELM PUMP		
Model	**Displacement**	**Code**
P20BAP + Kit MK40 P20BA + Kit MK40	20 cc/rev 1.22 cu.in/rev	IT21173+IT24855 IT16192+IT24855
P30BAP + Kit MK40 P30BA + Kit MK40	30 cc/rev 1.83 cu.in/rev	IT21174+IT24855 IT16193+IT24855
P42BAP + Kit MK40 P42BA + Kit MK40	42 cc/rev 2.56 cu.in/rev	IT21175+IT24855 IT16194+IT24855

TECHNICAL SPECIFICATIONS

Model	Mounting Configuration	Non-return valve	Relief valve	Displace-ment	# of pistons	Relief valve setting pressure	Fittings included	Min. wheel diameter	Max. wheel diameter	Weight
P20BAP + MK40 P20BA + MK40	Rear	Yes	Yes	20 cc/rev 1.22 cu.in/rev	5	70 bar 1000 psi	1/4"NPTF - 3/8" D.E. G1/4'' - hose d.10	350 mm 13,78 in.	711 mm 28 in.	2.6 Kg 5.8 lb
P30BAP + MK40 P30BA + MK40	Rear	Yes	Yes	30 cc/rev 1.83 cu.in/rev	5	70 bar 1000 psi	1/4"NPTF - 3/8" D.E. G1/4'' - hose d.10	350 mm 13,78 in.	711 mm 28 in.	3.0 Kg 6.7 lb
P42BAP + MK40 P42BA + MK40	Rear	Yes	Yes	42 cc/rev 2.56 cu.in/rev	7	70 bar 1000 psi	1/4"NPTF - 3/8" D.E. 1/4"NPTF - 1/2" D.E. G1/4'' - hose d.10 G1/4'' - hose d.12	450 mm 17,72 in.	711 mm 28 in.	3.0 Kg 6.7 lb

NOTE: The Twin Disc 20 cc - 30 cc - 42 cc helm pumps are provided with inch fittings. Versions with metric fittings are also available.
Please specify when placing the order. NOTE: For this pump model it is suggested the purchase of the filling kit mod. K100 (oil filling kit code IT18599).
See page 59.

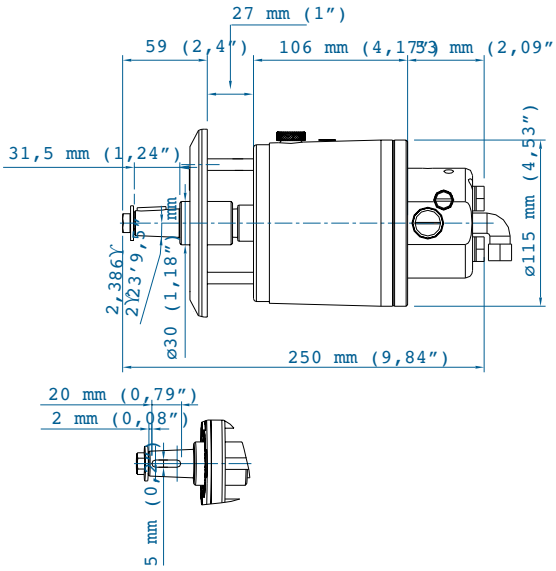

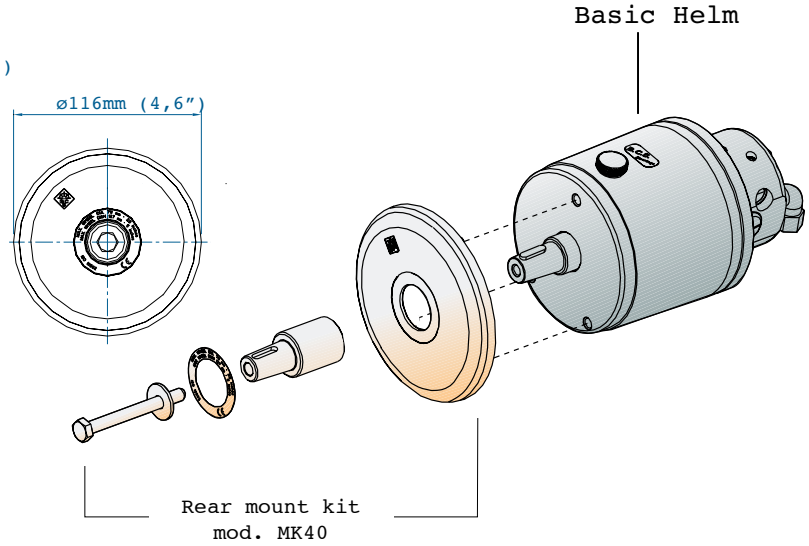

HELM PUMPS 20 CC - 30 CC - 42 CC

• INTERMEDIATE MOUNTING

Mounting Configuration

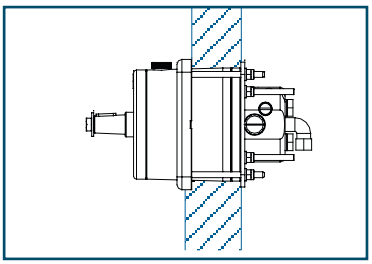

Order Guide

HELM PUMP		
Model	Displacement	Code
P20BAP + Kit MK10 P20BA + Kit MK10	20 cc/rev 1.22 cu.in/rev	IT21173+IT16199 IT16192+IT16199
P30BAP + Kit MK10 P30BA + Kit MK10	30 cc/rev 1.83 cu.in/rev	IT21174+IT16199 IT16193+IT16199
P42BAP + Kit MK10 P42BA + Kit MK10	42 cc/rev 2.56 cu.in/rev	IT21175+IT16199 IT16194+IT16199

TECHNICAL SPECIFICATIONS

Model	Mounting Configuration	Non-return valve	Relief valve	Displacement	# of pistons	Relief valve setting pressure	Fittings included	Min. wheel diameter	Max. wheel diameter	Weight
P20BAP+MK10 P20BA+MK10	Intermediate	Yes	Yes	20 cc/rev 1.22 cu.in/rev	5	70 bar 1000 psi	1/4"NPTF - 3/8" D.E. G1/4'' - hose d.10	350 mm 13,78 in.	711 mm 28 in.	2.6 Kg 5.8 lb
P30BAP+MK10 P30BA+MK10	Intermediate	Yes	Yes	30 cc/rev 1.83 cu.in/rev	5	70 bar 1000 psi	1/4"NPTF - 3/8" D.E. G1/4'' - hose d.10	350 mm 13,78 in.	711 mm 28 in.	3.0 Kg 6.7 lb
P42BAP+MK10 P42BA+MK10	Intermediate	Yes	Yes	42 cc/rev 2.56 cu.in/rev	7	70 bar 1000 psi	1/4"NPTF - 3/8" D.E. 1/4"NPTF - 1/2" D.E. G1/4'' - hose d.10 G1/4'' - hose d.12	450 mm 17,72 in.	711 mm 28 in.	3.0 Kg 6.7 lb

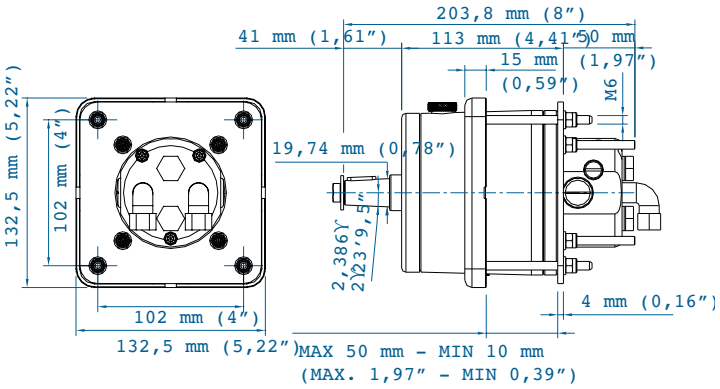

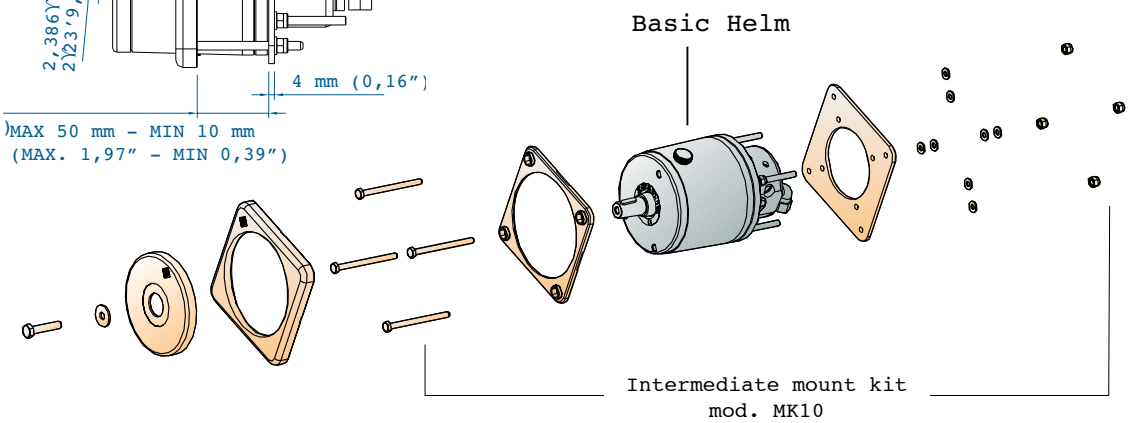

HELM PUMPS 20 CC - 30 CC - 42 CC

- MOUNTING WITH SPORT TILT

Mounting Configuration

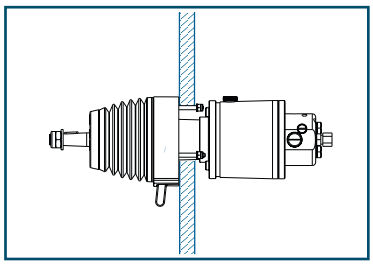

Order Guide

HELM PUMP		
Model	Displacement	Code
P20TSP P20TS	20 cc/rev 1.22 cu.in/rev	IT25726 IT25582
P30TSP P30TS	30 cc/rev 1.83 cu.in/rev	IT25727 IT25584
P42TSP P42TSP	42 cc/rev 2.56 cu.in/rev	IT25728 IT25585

TECHNICAL SPECIFICATIONS

Model	Mounting Configuration	Non-return valve	Relief valve	Displacement	# of pistons	Relief valve setting pressure	Fittings included	Min. wheel diameter	Max. wheel diameter	Weight
P20TSP P20TS	Tilt	Yes	Yes	20 cc/rev 1.22 cu.in/rev	5	70 bar 1000 psi	1/4"NPTF - 3/8" D.E. G1/4'' - hose d.10	350 mm 13,78 in.	508 mm 20 in.	3.9 Kg 8.6 lb
P30TSP P30TS	Tilt	Yes	Yes	30 cc/rev 1.83 cu.in/rev	5	70 bar 1000 psi	1/4"NPTF - 3/8" D.E. G1/4'' - hose d.10	350 mm 13,78 in.	508 mm 20 in.	3.9 Kg 8.6 lb
P42TSP P42TS	Tilt	Yes	Yes	42 cc/rev 2.56 cu.in/rev	7	70 bar 1000 psi	1/4"NPTF - 3/8" D.E. 1/4"NPTF - 1/2" D.E. G1/4'' - hose d.10 G1/4'' - hose d.12	450 mm 17,72 in.	508 mm 20 in.	3.9 Kg 8.6 lb

NOTE: For this model we suggest purchasing the filling kit mod. K100 (oil filling kit code IT18599). See page 59.

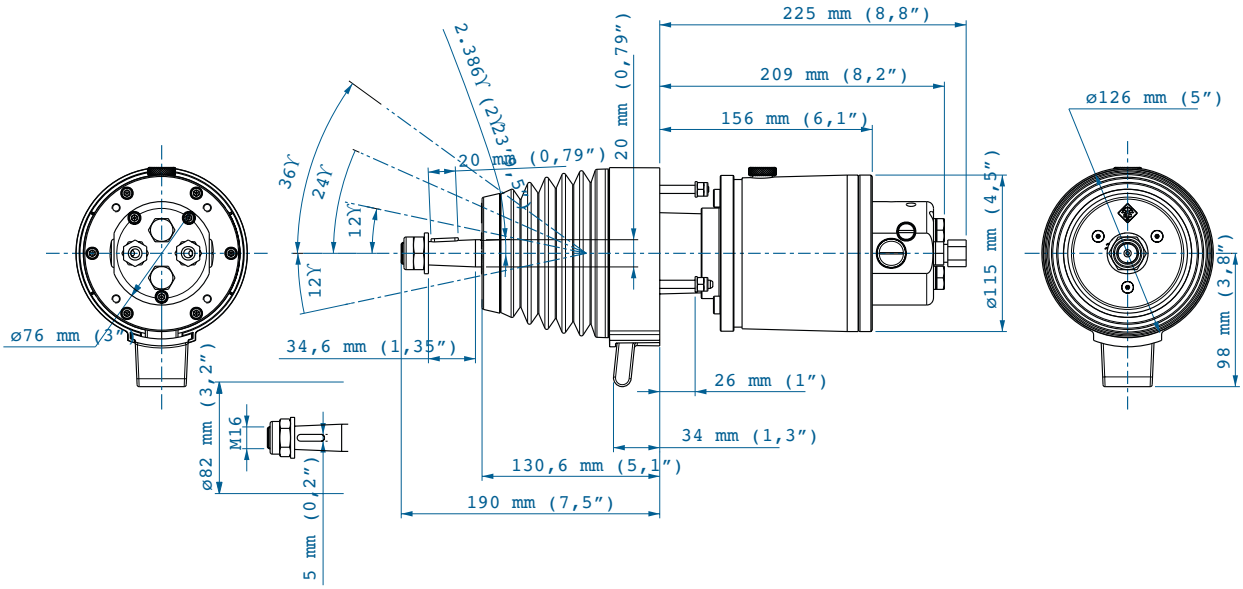

HEAVY DUTY HELM PUMPS

- MOD. P63T - P89T

Mounting Configuration
Rear Mounting

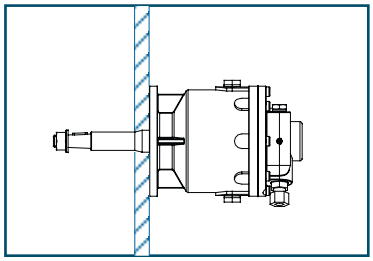

Mounting Configuration
Frontal Mounting

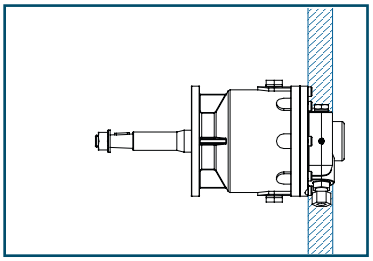

Order Guide

HEAVY DUTY HELM PUMP		
Model	Displacement	Code
P63	63 cc/rev	IT13996
	3.84 cu.in/rev	
P89T	89 cc/rev	IT14003
	5.5 cu.in/rev	

TECHNICAL SPECIFICATIONS

Model	Mounting	Non-return valve	Relief valve	Displacement	# of pistons	Fittings provided	Min. wheel diameter	Max. wheel diameter	Weight
P63T	Rear Frontal	No	No	63 cc/rev	5	/	700 mm	1016 mm	8,7 Kg
				3.84 cu.in/rev			27,56 in.	40 in.	19.2 lb
P89T	Rear Frontal	No	No	89 cc/rev	7	/	700 mm	1016 mm	8,9 Kg
				5.5 cu.in/rev			27,56 in.	40 in.	20.0 lb

NOTE: Available with metrical fittings only.

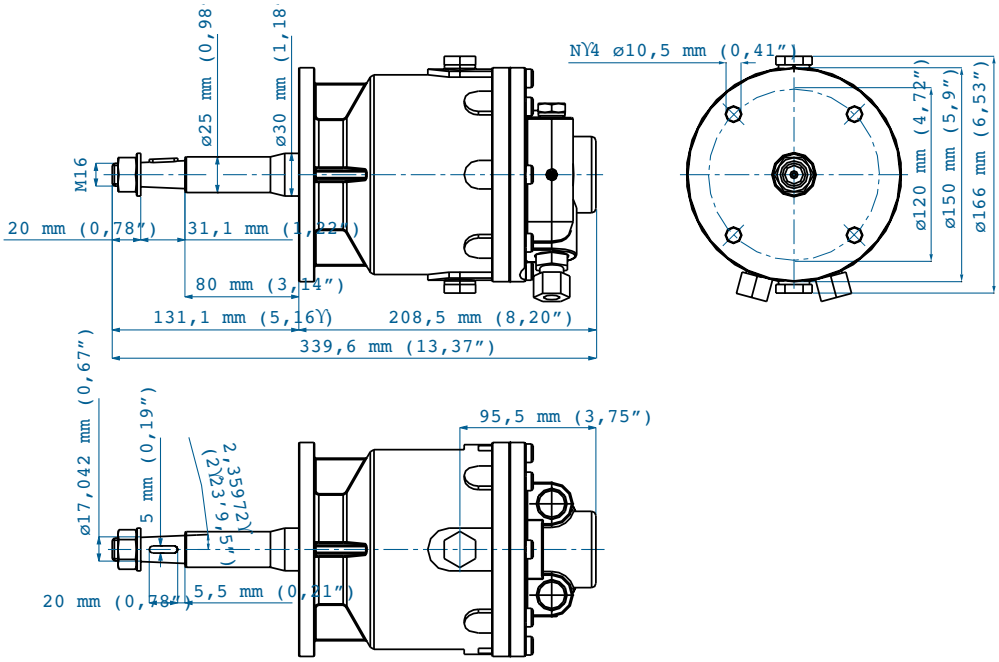

HEAVY DUTY HELM PUMPS

• MOD. P63S - P89S WITH OIL TANK

Mounting Configuration
Rear Mounting

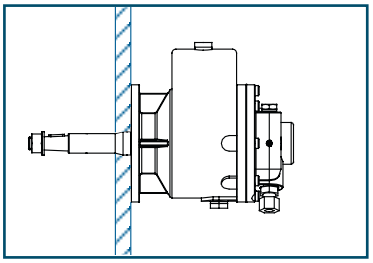

Mounting Configuration
Frontal Mounting

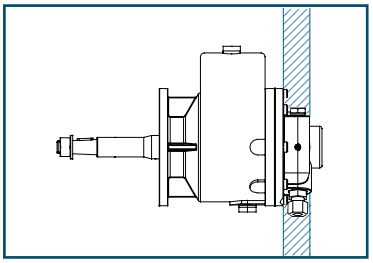

Order Guide

HEAVY DUTY HELM PUMPS		
Model	Displacement	Code
P63S	63 cc/rev	IT13995
	3.84 cu.in/rev	
P89S	89 cc/rev	IT14002
	5.5 cu.in/rev	

TECHNICAL SPECIFICATIONS

Model	Mounting	Non-return valve	Relief valve	Displacement	# of pistons	Fittings provided	Min. wheel diameter	Max. wheel diameter	Weight
P63S	Rear Frontal	No	No	63 cc/rev	5	/	700 mm	1016 mm	9,3 Kg
				3.84 cu.in/rev			27,56 in.	40 in.	20.5 lb
P89S	Rear Frontal	No	No	89 cc/rev	7	/	700 mm	1016 mm	9,5 Kg
				5.5 cu.in/rev			27,56 in.	40 in.	21.0 lb

NOTE: Available with metrical fittings only.

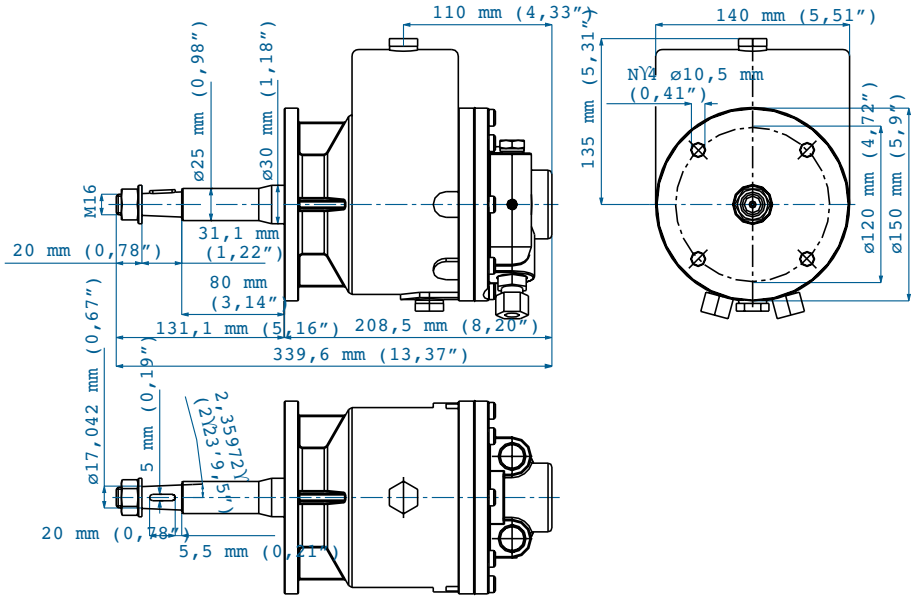

HEAVY DUTY HELM PUMPS

• MOD. P105 - P151 - P191 WITH OIL TANK

Mounting Configuration

Frontal Mounting

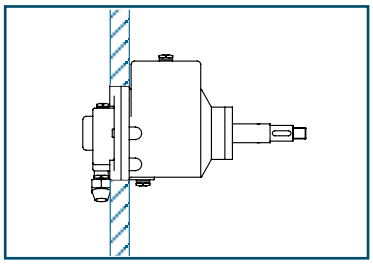

Order Guide

HEAVY DUTY HELM PUMPS		
Model	Displacement	Code
P105	105 cc/rev	IT14052
	6,4 cu.in/rev	
P151	151 cc/rev	IT14082
	9,2 cu.in/rev	
P191	191cc/rev	IT14084
	11,7 cu.in/rev	

TECHNICAL SPECIFICATIONS

Model	Mounting	Non-return valve	Relief valve	Displacement	# of pistons	Fittings provided	Min. wheel diameter	Max. wheel diameter	Weight
P105	Rear	No	No	105 cc/rev	5	G1/2” 18 mm O.D.	1000 mm	1220 mm	21,5 Kg
				6,4 cu.in/rev			39,37 in.	48 in.	47,39 lb
P151	Rear	No	No	151 cc/rev	7	G1/2” 18 mm O.D.	1000 mm	1220 mm	23,2 Kg
				9,2 cu.in/rev			39,37 in.	48 in.	51,14 lb
P191	Rear	No	No	191 cc/rev	7	G1/2” 18 mm O.D.	1000 mm	1220 mm	24,5 Kg
				11,7 cu.in/rev			39,37 in.	48 in.	54,00 lb

NOTE: Available with metrical fittings only.

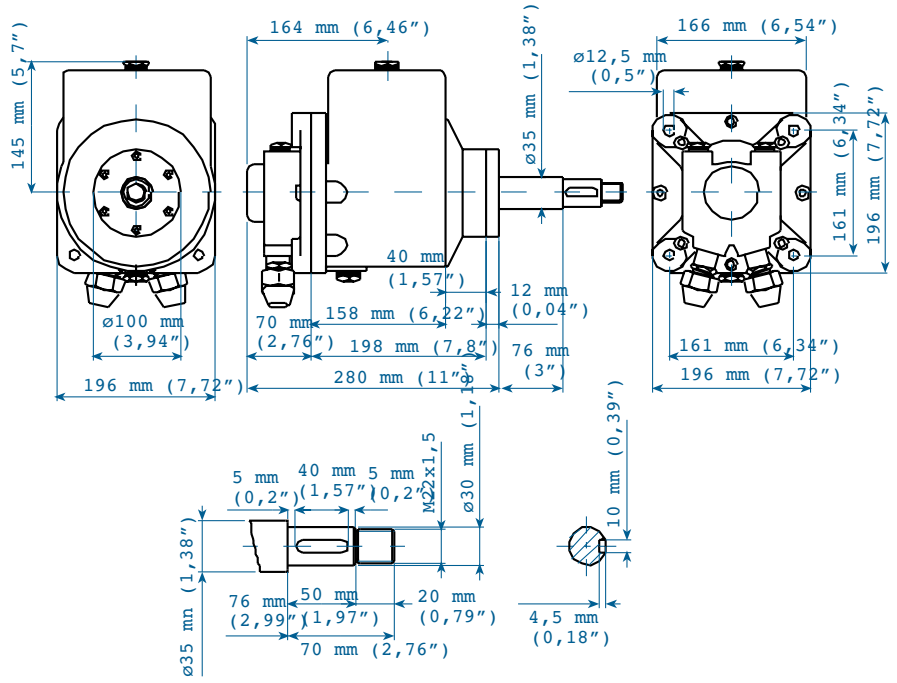

SYSTEM 1

■ Metrical Fittings ■ Imperial Fittings

ALUMINUM CYLINDER			
Components	**Model**	**Code**	**Qty.**
Cylinder	CTA40U - CTA40	IT15649 - IT12675	1
Helm pump	Choose the pump model according to the desired wheel turns below		1
Hydraulic oil	VG22	IT21334	3
Bypass	Choose the bypass model according to the pump-cylinder combination in the table below		1
In case of additional station add:			
Second station helm pump	Same pump model as above	(see table on page bottom)	1
Second station fittings kit		IT23376 - IT23487	1
Hydraulic oil	VG22	IT21334	1
In case of autopilot installation please add:			
Autopilot power unit	Choose autopilot power unit model in the Order Guide on pages 43-44		1
Autopilot fittings kit		IT23377 - IT23489	1

PUMP-CYLINDER COMBINATION

	HELM PUMP		
Choose combination between pump and cylinder according to the desired number of wheel turns lock-to-lock. Note: the requested effort on the steering wheel is inversely proportional to the wheel turns number lock-to-lock: • less wheel turns, more effort • more wheel turns, less effort Note: by increasing the wheel diameter within the specified limitations, the requested effort is reduced.	 P20BAP Cod. IT21173 P20BA Cod. IT16192 (*)	 P30BAP Cod. IT21174 P30BA Cod. IT16193 (*)	 P42BAP Cod. IT21175 P42BA Cod. IT16194 (*)
CYLINDER CTA40U - Cod. / Part # IT15649 CTA40 - Cod. / Part # IT12675	# of wheel turns: 5,8 Min. hose size: 5/16” I.D. Tiller: 153 mm - 6,02 in. Angle: 35° + 35° Torque: 57,83 Kgm - 5028 in/lb Min. wheel diam.: 350 mm-13,77 in. Bypass: cod. IT23186 - IT12216	# of wheel turns: 3,9 Min. hose size: 5/16” I.D. Tiller: 153 mm - 6,02 in. Angle: 35° + 35° Torque: 57,83 Kgm - 5028 in/lb Min. wheel diam.: 350 mm-13,77 in. Bypass: cod. IT23186 - IT12216	

Rudder torque calculated at the working pressure of 70 bar (1000 psi).
(*) For more details, see the basic helm section starting on page 9 to choose the desired mounting configuration.

Steering Effort Key LIGHT NORMAL HEAVY

SYSTEM 2

ALUMINUM CYLINDER			
Components	**Model**	**Code**	**Qty.**
Cylinder	CTA65U - CTA65 CTA75U - CTA75	IT12677 - IT12676 IT15763 - IT12678	1
Helm pump	Choose the pump model according to the desired wheel turns in the table below		1
Hydraulic Oil	VG22	IT21334	3
Bypass	Choose the bypass model according to the Pump-Cylinder combination in the table below		1
In case of additional station add:			
Second station helm pump	Same pump model as above	(see table at bottom of page)	1
Second station fittings kit		IT23376 - IT23487	1
Hydraulic oil	VG22	IT21334	1
In case of autopilot installation please add:			
Autopilot power unit(****)	Choose autopilot power unit model in the Order Guide on pages 43-44		1
Autopilot fittings kit		IT23377 - IT23487 (****)	1

PUMP-CYLINDER COMBINATION

Choose combination between pump and cylinder according to the desired number of wheel turns lock-to-lock. Note: the requested effort on the steering wheel is inversely proportional to the wheel turns number lock-to-lock: • less wheel turns, more effort • more wheel turns, less effort Note: by increasing the wheel diameter within the specified limitations, the requested effort is reduced.		HELM PUMP		
		 P20BAP Cod. IT21173 P20BA Cod. IT16192 (*)	 P30BAP Cod. IT21174 P30BA Cod. IT16193 (*)	 P42BAP Cod. IT21175 P42BA Cod. IT16194 (*)
CYLINDER	 CTA65U - Cod. / Part # IT12677 CTA65 - Cod. / Part # IT12676		N. of wheel turns: 5,6 Min. hose size: 5/16” I.D. Tiller: 153 mm - 6,02 in. Angle: 35° + 35° Torque: 83,81 Kgm - 7287 in/lb Min. wheel diam: 350 mm-13,77 in. Bypass: cod. IT23186 - IT12216	
	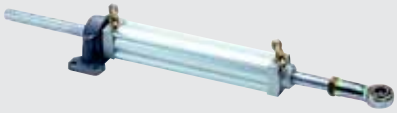 CTA75U - Cod. / Part # IT15763 CTA75 - Cod. / Part # IT12678		N. of wheel turns: 6,3 Min. hose size: 5/16” I.D. Tiller : 175 mm - 6,89 in. Angle: 35° + 35° Torque: 94,17 Kgm - 8188 in/lb Min. wheel diam: 350 mm-13,77 in. Bypass: cod. IT23186 - IT12216	

Rudder torque calculated at the working pressure of 70 bar (1000 psi).
(*) For more details, see the basic helm section starting on page 9 and choose the desired mounting configuration.
(****) In case an autopilot with power unit filling is installed, the fitting kit is code IT23376 - IT23487.

Steering Effort Key LIGHT NORMAL HEAVY

SYSTEM 3

ALUMINUM CYLINDER			
Components	**Model**	**Code**	**Qty.**
Cylinder	CTA80U - CTA80	IT12682 - IT12679	1
Helm pump	Choose the pump model according to the desired wheel turns below		1
Hydraulic oil	VG22	IT21334	3
Bypass	Choose the bypass model according to the Pump-Cylinder combination in the table below		1
In case of additional station add:			
Second station helm pump	Same pump model as above	(see table on page bottom)	1
Second station fittings kit		IT23376 or IT23418 (***) IT23487 or IT23488 (***)	1
Hydraulic oil	VG22	IT21334	1
In case of autopilot installation please add:			
Autopilot power unit(****)	Choose autopilot power unit model on pages 43-44		1
Autopilot fittings kit(****)		IT23377 or IT23373 (***) IT23489 or IT23490 (***)	1

PUMP-CYLINDER COMBINATION

	HELM PUMP		
Choose combination between pump and cylinder according to the desired number of wheel turns lock-to-lock. Note: the requested effort on the steering wheel is inversely proportional to the wheel turns number lock-to-lock: • less wheel turns, more effort • more wheel turns, less effort Note: by increasing the wheel diameter within the specified limitations, the requested effort is reduced.	 P20BAP Cod. IT21173 P20BA Cod. IT16192 (*)	 P30BAP Cod. IT21174 P30BA Cod.IT16193 (*)	 P42BAP Cod. IT21175 P42BA Cod. IT16194 (*)
CYLINDER CTA80U Cod. / Part # IT12682 CTA80 - Cod. / Part # IT12679		N. of wheel turns: 7,2 Min. hose size: 5/16” I.D. Tiller: 200 mm - 7,87 in. Angle: 35° + 35° Torque: 107,36 Kgm - 9335 in/lb Min. wheel diam: 350 mm-13,77 in. Bypass: cod. IT23186 - IT12216	N. of wheel turns: 5,1 Min. hose size: 5/16” - 3/8” I.D. Tiller: 200 mm - 7,87 in. Angle: 35° + 35° Torque: 107,36 Kgm - 9335 in/lb Min. wheel diam: 450 mm-17,71 in. Bypass: cod. IT23186 - IT23480 (***) IT12216 - IT16968 (***)

Rudder torque calculated at the working pressure of 70 bar (1000 psi).
(*) For more details, see the basic helm section starting on page 9 to choose the desired mounting configuration.
(***) It is suggested for combination with 42cc helm pump if the total length between pump and cylinder exceeds 8 mt - 24’.
(****) In case an autopilot power unit with automatic filling is installed, the fitting kits are respectively the code IT23376-IT23418/IT23487 - IT23488

SYSTEM 4

BRASS CYLINDER			
Components	**Model**	**Code**	**Qty.**
Cylinder	CTB110U - CTB130U CTB110 - CTB130	IT12687 - IT12691 IT12683 - IT15606	1
Helm pump	Choose the pump model according to the desired wheel turns below		1
Hydraulic oil	VG22	IT21334	3
Bypass	Choose the bypass model according to the Pump-cylinder combination in the table below		1
In case of additional station add:			
Second station helm pump	Same pump model as above	(see table on next page)	1
Second station fittings kit		IT23376 - IT23418 (***) IT23487 - IT23488 (***)	1
Hydraulic oil	VG22	IT23377 - IT23373 (***) IT23489 - IT23490 (***)	1
In case of autopilot installation please add:			
Autopilot power unit(****)	Choose autopilot power unit model in the Order Guide on pages 43-44		1
Autopilot fittings kit		IT23373 (****) - IT23490 (***)	1

PUMP-CYLINDER COMBINATION

Choose combination between pump and cylinder according to the desired number of wheel turns lock-to-lock. Note: the requested effort on the steering wheel is inversely proportional to the wheel turns number lock-to-lock: • less wheel turns, more effort • more wheel turns, less effort Note: by increasing the wheel diameter within the specified limitations, the requested effort is reduced.		HELM PUMP		
		 P20BAP Cod. IT21173 P20BA Cod. IT16192 (*)	 P30BAP Cod. IT21174 P30BA Cod. IT16193 (*)	 P42BAP Cod. IT21175 P42BA Cod. IT16194 (*)
CYLINDER	 CTB110U - Cod. / Part # IT12687 CTB110 - Cod. / Part # IT12683			# of wheel turns: 6,7 Min. hose size: 3/8" I.D. Tiller: 153 mm - 6,02 in. Angle: 35° + 35° Torque: 140,85 Kgm - 12247 in/lb Min. wheel diam: 450 mm-17,71 in. Bypass: cod. IT23186 - IT23480 (***) IT12216 - IT16968 (***)
	 CTB130U Cod. / Part # IT12691 CTB130 - Cod. / Part # IT15606			N. of wheel turns: 7,7 Min. hose size: 3/8" I.D. Tiller: 180 mm - 7 in. Angle: 35° + 35° Torque: 140,85 Kgm - 12247 in/lb Min. wheel diam: 450 mm-17,71 in. Bypass: cod. IT23186 - IT23480 (***) IT12216 - IT16968 (***)

Rudder torque calculated at the working pressure of 70 bar (1000 psi).
(*) For more details, see the basic helm section on page 9 to choose the desired mounting configuration.
(***) It is suggested for combination with 42cc helm pump if the total length between pump and cylinder exceeds 8 mt - 24'.
(****) In case an autopilot power unit with automatic filling is installed, the fitting kit is code IT23376 - IT23418 / IT23487 - IT23488.

Steering Effort Key LIGHT NORMAL HEAVY

SYSTEM 5

BRASS CYLINDER			
Components	**Model**	**Code**	**Qty.**
Cylinder	CTB145U - CTB145	IT12694 - IT12692	1
Helm pump	Choose the pump model according to the desired wheel turns below		1
Hydraulic oil	VG22	IT21334	3
Bypass	Choose the bypass model according to the Pump-Cylinder combination in the table here below		1
In case of additional station add:			
Second station helm pump	Same pump model as above	(see table on page bottom)	1
Second station fittings kit		IT23418 - IT21488	1
Hydraulic oil	VG22	IT21334	1
In case of autopilot installation please add:			
Autopilot power unit(****)	Choose autopilot power unit model on pages 43-44		1
Autopilot fittings kit		IT23373 - IT23490 (****)	1

PUMP-CYLINDER COMBINATION

		HELM PUMP		
Choose combination between pump and cylinder according to the desired number of wheel turns lock-to-lock. Note: the requested effort on the steering wheel is inversely proportional to the wheel turns number lock-to-lock: • less wheel turns, more effort • more wheel turns, less effort Note: by increasing the wheel diameter within the specified limitations, the requested effort is reduced.		 P20BAP Cod. IT21173 P20BA Cod. IT16192 (*)	 P30BAP Cod. IT21174 P30BA Cod. IT16193 (*)	 P42BAP Cod. IT21175 P42BA Cod. IT16194 (*)
CYLINDER	 CTB145 - Cod. / Part # IT12694 CTB145 - Cod. / Part # IT12692			N. of wheel turns: 8,6 Min. hose size: 3,8" I.D. Tiller: 200 mm - 7,8 in. Angle: 35° + 35° Torque: 140,85 Kgm - 12247 in/lb Min. wheel diam: 450 mm-17,71 in. Bypass: cod. IT23480 - IT16968

Rudder torque calculated at the working pressure of 70 bar (1000 psi).
(*) For more details, see the basic helm section on page 9 to choose the desired mounting configuration.
(****) In case an autopilot power unit with automatic filling is installed, the fitting kit is code IT23418 - IT23488.

SYSTEM 6

SINGLE-station steering system				DOUBLE-station steering system			
Components	**Model**	**Code**	**Qty.**	**Components**	**Model**	**Code**	**Qty.**
Cylinder	CTC200	IT12695	1	Cylinder	CTC200	IT12695	1
Flexible hoses for cylinder	Included	/	2	Flexible hoses for cylinder	Included	/	2
Main station pump	P63S	IT13995	1	Main station pump	P63T	IT13996	1
Second station pump	/	/	/	Second station pump	P63S	IT13995	1
Pump fittings kit		IT14359 IT14360	2	Pump fittings kit		IT23492 IT23493**	1
Suggested min. hose size	Copper tube d.e.12 x 1 mm or Copper tube d.e. 14 x 1 mm	/	/	Suggested min. hose size	Copper tube d.e.12 x 1 mm or Copper tube d.e. 14 x 1 mm	/	/
Hydraulic oil	VG22	IT21334	4	Hydraulic oil	VG22	IT21334	4
See on page bottom for bypass and valve selection according to pump type and tube length							
In case of autopilot installation please add:							
Autopilot power unit	Choose autopilot power unit model in the Order Guide on pages 43-44		1	Autopilot power unit	Choose autopilot power unit model in the Order Guide on pages 43-44		1

PUMP-CYLINDER COMBINATION

Choose combination between pump and cylinder according to the desired number of wheel turns lock-to-lock.
Note: the requested effort on the steering wheel is inversely proportional to the wheel turns number lock-to-lock:
- less wheel turns, more effort
- more wheel turns, less effort

Note: by increasing the wheel diameter, the requested effort is reduced.

HELM PUMP

P63T
Cod. IT13996 (*)

P63S
Cod. IT13995 (*)

CYLINDER

CTC200
Cod. / Part # IT12695

No. of wheel turns: 7,9
Min. hose size: copper tube d.e. 12x1 mm or copper tube d.e. 14x1 mm (**)
Tiller: 175 MM / 6.9 in.
Angle: 35° + 35°
Torque: 249,93 Kgm / 21643 lb.in.
Min. wheel diam.: 700 mm - 27,56 in.

Pump	# of stations	Kit Fittings Code		Valve and Bypass code				Type and length of copper tube between pump and cylinder	
		< 15 mt - 45'	> 15 mt - 45'	Non return valve	Relief valve	Non return valve Bypass	Manual Bypass		
P63	1	IT14359 x 2 Qty.			IT23500	IT15707		Copper tube d.e. 12 x 1 mm	< 15 mt - 45'
	1		IT14360 x 2 Qty.		IT23501	IT17672		Copper tube d.e. 14 x 1 mm	> 15 mt - 45'
	2	IT23492		IT15708	IT23500		IT16968	Copper tube d.e. 12 x 1 mm	< 15 mt - 45'
	2		IT23493	IT23513	IT23501		IT12134	Copper tube d.e. 14 x 1 mm	> 15 mt - 45'

Steering Effort Key LIGHT NORMAL HEAVY

SYSTEM 7

SINGLE-station steering system				DOUBLE-station steering system			
Components	**Model**	**Code**	**Qty.**	**Components**	**Model**	**Code**	**Qty.**
Cylinder	CTC230	IT12698	1	Cylinder	CTC230	IT12698	1
Flexible hoses for cylinder	Included	/	2	Flexible hoses for cylinder	Included	/	2
Main station pump	P63S	IT13995	1	Main station pump	P63T	IT13996	1
Second station pump	/	/	/	Second station pump	P63S	IT13995	1
Pump fittings kit		IT14359 IT14360	2	Pump fittings kit		IT23492 IT23493**	1
Suggested min. hose size	Copper tube d.e.12 x 1 mm or Copper tube d.e. 14 x 1 mm	/	/	Suggested min. hose size	Copper tube d.e.12 x 1 mm or Copper tube d.e. 14 x 1 mm	/	/
Hydraulic oil	VG22	IT21334	4	Hydraulic oil	VG22	IT21334	4
See on page bottom for bypass and valve selection according to pump type and tube length							
In case of autopilot installation please add:							
Autopilot power unit	Choose autopilot power unit model in the Order Guide on pages 43-44		1	Autopilot power unit	Choose autopilot power unit model in the Order Guide on pages 43-44		1

PUMP-CYLINDER COMBINATION

Choose combination between pump and cylinder according to the desired number of wheel turns lock-to-lock.
Note: the requested effort on the steering wheel is inversely proportional to the wheel turns number lock-to-lock:
- less wheel turns, more effort
- more wheel turns, less effort

Note: by increasing the wheel diameter within the specified limitations, the requested effort is reduced.

HELM PUMP

P63T
Cod. IT13996 (*)

P63S
Cod. IT13995 (*)

CYLINDER

CTC230
Cod. / Part # IT12698

No. of wheel turns: 7,9
Min. hose size: copper tube d.e. 12x1 mm or copper tube d.e. 14x1 mm (**)
Tiller: 175 MM / 6.9 in.
Angle: 35° + 35°
Torque: 249,93 Kgm / 21643 lb.in.
Min. wheel diam.: 700 mm - 27,56 in.

Pump	# of stations	Kit Fittings Code		Valve and Bypass code				Type and length of copper tube between pump and cylinder	
		< 15 mt - 45’	> 15 mt - 45’	Non return valve	Relief valve	Non return valve Bypass	Manual Bypass		
P63	1	IT14359 x 2 Qty.			IT23500	IT15707		Copper tube d.e. 12 x 1 mm	< 15 mt - 45’
	1		IT14360 x 2 Qty.		IT23501	IT17672		Copper tube d.e. 14 x 1 mm	> 15 mt - 45’
	2	IT23492		IT15708	IT23500		IT16968	Copper tube d.e. 12 x 1 mm	< 15 mt - 45’
	2		IT23493	IT23513	IT23501		IT12134	Copper tube d.e. 14 x 1 mm	> 15 mt - 45’

SYSTEM 8

SINGLE-Station Steering System				DOUBLE-Station Steering System			
Components	**Model**	**Code**	**Qty.**	**Components**	**Model**	**Code**	**Qty.**
Cylinder	CTC300	IT12701	1	Cylinder	CTC300	IT12701	1
Flexible hoses for cylinder	Included	/	2	Flexible hoses for cylinder	Included	/	2
Main station pump	P63S or P89S	IT13995 IT14002	1	Main station pump	P63T or P89T	IT13996 IT14003	1
Second station pump	/	/	/	Second station pump	P63S or P89S	IT13995 IT14002	1
Pump fittings kit		IT14360 IT14361**	2	Pump fittings kit		IT23493 IT23452**	1
Suggested min. hose size	Copper tube d.e.14 x 1 mm or Copper tube d.e.18 x 1,5 mm**		/	Suggested min. hose size	Copper tube d.e.14 x 1 mm or Copper tube d.e.18 x 1,5 mm**		/
Hydraulic oil	VG22	IT21334	4	Hydraulic oil	VG22	IT21334	4
See on page bottom for bypass and valve selection according to pump type and tube length							
In case of autopilot installation please add:							
Autopilot power unit	Choose autopilot power unit model in the Order Guide on pages 43-44		1	Fittings kit for autopilot	Choose autopilot power unit model in the Order Guide on pages 43-44		1

PUMP-CYLINDER COMBINATION

Choose combination between pump and cylinder according to the desired number of wheel turns lock-to-lock.
Note: the requested effort on the steering wheel is inversely proportional to the wheel turns number lock-to-lock:
- less wheel turns, more effort
- more wheel turns, less effort

Note: by increasing the wheel diameter within the specified limitations, the requested effort is reduced.

HELM PUMP

P63T
Cod. IT13996 (*)

P63S
Cod. IT13995 (*)

P89T
Cod. IT14003 (*)

P89S
Cod. IT14002 (*)

CYLINDER

CTC300
Cod. / Part # IT12701

No. of wheel turns: 11,9
Copper tube d.e. 14x1 mm
or copper tube d.e. 18x1,5 mm (**)
Tiller: 260 MM / 10,24 in.
Angle: 35° + 35°
Torque: 374,89 Kgm / 32465 lb.in.
Min. wheel diam.: 700 mm - 27,56 in.

No. of wheel turns: 8,4
Copper tube d.e. 14x1 mm
or copper tube d.e. 18x1,5 mm (**)
Tiller: 260 MM / 10,24 in.
Angle: 35° + 35°
Torque: 374,89 Kgm / 32465 lb.in.
Min. wheel diam.: 700 mm - 27,56 in.

(*)Max. rudder torque calculated at a working pressure of 70 bar/1000 psi. See the heavy duty pumps section on page 14 for more information.
(**) To be used when the hose length between pump and cylinder exceeds 15 mt - 45'.

Pump	# of stations	Kit Fittings Code		Valve and Bypass Code				Type and length of copper tube between pump and cylinder	
		< 15 mt - 45'	> 15 mt - 45'	Non return valve	Relief valve	Non return valve Bypass	Manual Bypass		
P63	1	IT14360 x 2 Qty.			IT23501	IT17672		Copper tube d.e. 14 x 1 mm	< 15 mt - 45'
	1		IT14361 x 2 Qty.		IT23503	IT15709		Copper tube d.e. 18 x 1,5 mm	> 15 mt - 45'
	2	IT23493		IT23513	IT23501		IT12134	Copper tube d.e. 14 x 1 mm	< 15 mt - 45'
	2		IT23452		IT23503	IT15709 x 2 Qty.		Copper tube d.e. 18 x 1,5 mm	> 15 mt - 45'
P89	1	IT14360 x 2 Qty.			IT23501	IT17672		Copper tube d.e. 14 x 1 mm	< 15 mt - 45'
	1		IT14361 x 2 Qty.		IT23503	IT15709		Copper tube d.e. 18 x 1,5 mm	> 15 mt - 45'
	2	IT23493		IT23513	IT23501		IT12134	Copper tube d.e. 14 x 1 mm	< 15 mt - 45'
	2		IT23452		IT23503	IT15709 x 2 Qty.		Copper tube d.e. 18 x 1,5 mm	> 15 mt - 45'

Steering Effort Key LIGHT NORMAL HEAVY

SYSTEM 9

SINGLE-Station Steering System				DOUBLE-Station Steering System			
Components	**Model**	**Code**	**Qty.**	**Components**	**Model**	**Code**	**Qty.**
Cylinder	CTC400 or CTD310	IT15697 IT15698	1	Cylinder	CTC400 or CTD310	IT15697 IT15698	1
Flexible hoses for cylinder	Included	/	2	Flexible hoses for cylinder	Included	/	2
Main station pump	P63S or P89S	IT13995 IT14002	1	Main station pump	P63T or P89T	IT13996 IT14003	1
Second station pump	/	/	/	Second station pump	P63S or P89S	IT13995 IT14002	1
Pump fittings kit		IT14360 IT14361**	2	Pump fittings kit		IT23493 IT23452	1
Suggested min. hose size	Copper tube d.e.14 x 1 mm or Copper tube d.e.18 x 1,5 mm**		/	Suggested min. hose size	Copper tube d.e.14 x 1 mm or Copper tube d.e.18 x 1,5 mm**		/
Hydraulic oil	VG22	IT21334	4	Hydraulic oil	VG22	IT21334	4
See on page bottom for bypass and valve selection according to pump type and tube length							
In case of autopilot installation please add:							
Autopilot power unit	Choose autopilot power unit model in the Order Guide on pages 43-44		1	Fittings kit for autopilot	Choose autopilot power unit model in the Order Guide on pages 43-44		1

PUMP-CYLINDER COMBINATION

Choose combination between pump and cylinder according to the desired number of wheel turns lock-to-lock. Note: the requested effort on the steering wheel is inversely proportional to the wheel turns number lock-to-lock:
- less wheel turns, more effort
- more wheel turns, less effort

Note: by increasing the wheel diameter within the specified limitations, the requested effort is reduced.

HELM PUMP

P63T
Cod. IT13996 (*)

P63S
Cod. IT13995 (*)

P89T
Cod. IT14003 (*)

P89S
Cod. IT14002 (*)

CYLINDER

CTC400
Cod. / Part # IT15697

No. of wheel turns: 15,9
Copper tube d.e. 14x1 mm
or copper tube d.e. 18x1,5 mm (**)
Tiller: 350 mm / 13,78 in.
Angle: 35° + 35°
Torque: 400 Kgm / 34780 lb.in.
Min. wheel diam.: 700 mm - 27,56 in.

No. of wheel turns: 11,2
Copper tube d.e. 14x1 mm
or copper tube d.e. 18x1,5 mm (**)
Tiller: 350 mm / 13,78 in.
Angle: 35° + 35°
Torque: 400 Kgm / 34780 lb.in.
Min. wheel diam.: 700 mm - 27,56 in.

CTC310
Cod. / Part # IT15698

No. of wheel turns: 13,4
Copper tube d.e. 14x1 mm
or copper tube d.e. 18x1,5 mm (**)
Tiller: 175 mm / 6,88 in.
Angle: 35° + 35°
Torque: 422 Kgm / 36693 lb.in.
Min. wheel diam.: 700 mm - 27,56 in.

No. of wheel turns: 9,5
Copper tube d.e. 14x1 mm
or copper tube d.e. 18x1,5 mm (**)
Tiller: 260 mm / 10,24 in.
Angle: 35° + 35°
Torque: 422 Kgm / 36693 lb.in.
Min. wheel diam.: 700 mm - 27,56 in.

(*) Max. rudder torque calculated at a working pressure of 70 bar/1000 psi. See the specific heavy duty pumps section on page 14 for more information.
(**) To be used when the hose length between pump and cylinder exceeds 15 mt - 45'.

Pump	# of stations	Kit Fittings Code		Valve and Bypass code				Type and length of copper tube between pump and cylinder	
		< 15 mt - 45'	> 15 mt - 45'	Non return valve	Relief valve	Non return valve Bypass	Manual Bypass		
P63	1	IT14360 x 2 Qty.			IT23501	IT17672		Copper tube d.e. 14 x 1 mm	< 15 mt - 45'
	1		IT14361 x 2 Qty.		IT23503	IT15709		Copper tube d.e. 18 x 1,5 mm	> 15 mt - 45'
	2	IT23493		IT23513	IT23501		IT12134	Copper tube d.e. 14 x 1 mm	< 15 mt - 45'
	2		IT23452		IT23503	IT15709 x 2 Qty.		Copper tube d.e. 18 x 1,5 mm	> 15 mt - 45'
P89	1	IT14360 x 2 Qty.			IT23501	IT17672		Copper tube d.e. 14 x 1 mm	< 15 mt - 45'
	1		IT14361 x 2 Qty.		IT23503	IT15709		Copper tube d.e. 18 x 1,5 mm	> 15 mt - 45'
	2	IT23493		IT23513	IT23501		IT12134	Copper tube d.e. 14 x 1 mm	< 15 mt - 45'
	2		IT23452		IT23503	IT15709 x 2 Qty.		Copper tube d.e. 18 x 1,5 mm	> 15 mt - 45'

SYSTEM 10

SINGLE-Station Steering System				DOUBLE-Station Steering System			
Components	**Model**	**Code**	**Qty.**	**Components**	**Model**	**Code**	**Qty.**
Cylinder	CTD450	IT15699	1	Cylinder	CTD450	IT15699	1
Flexible hoses for cylinder	Included	/	2	Flexible hoses for cylinder	Included	/	2
Main station pump	P89S or P105	IT14002 IT14052	1	Main station pump	P89T or P105	IT14003 IT14052	1
Second station pump	/	/	/	Second station pump	P89S or P105	IT14002 IT14052	1
Pump fittings kit		IT14360 IT14361**	2	Pump fittings kit	See table on page bottom		1
Suggested min. hose size	Copper tube d.e.14 x 1 mm or Copper tube d.e.18 x 1,5 mm**		/	Suggested min. hose size	Copper tube d.e.14 x 1 mm or Copper tube d.e.18 x 1,5 mm**		/
Hydraulic oil	VG22	IT21334	4	Hydraulic oil	VG22	IT21334	4
See on page bottom for bypass and valve selection according to pump type and tube length							
In case of autopilot installation please add:							
Autopilot power unit	Choose autopilot power unit model in the Order Guide on pages 43-44		1	Fittings kit for autopilot	Choose autopilot power unit model in the Order Guide on pages 43-44		1

PUMP-CYLINDER COMBINATION

Choose combination between pump and cylinder according to the desired number of wheel turns lock-to-lock.
Note: the requested effort on the steering wheel is inversely proportional to the wheel turns number lock-to-lock:
- less wheel turns, more effort
- more wheel turns, less effort

Note: by increasing the wheel diameter within the specified limitations, the requested effort is reduced.

	HELM PUMP		
	 P89T Cod. IT14003 (*)	 P89S Cod. IT14002 (*)	 P105 Cod. IT14052 (*)
CYLINDER CTD450 Cod. / Part #IT15699	No. of wheel turns: 14,2 Copper tube d.e. 14x1 mm or copper tube d.e. 18x1,5 mm (**) Tiller: 260 mm / 10,24 in. Angle: 35° + 35° Torque: 633 Kgm / 55040 lb.in. Min. wheel diam.: 700 mm - 27,56 in.	No. of wheel turns: 14,2 Copper tube d.e. 14x1 mm or copper tube d.e. 18x1,5 mm (**) Tiller: 260 mm / 10,24 in. Angle: 35° + 35° Torque: 633 Kgm / 55040 lb.in. Min. wheel diam.: 700 mm - 27,56 in.	No. of wheel turns: 12,1 Copper tube d.e. 14x1 mm or copper tube d.e. 18x1,5 mm (**) Tiller: 260 mm / 10,24 in. Angle: 35° + 35° Torque: 633 Kgm / 55040 lb.in. Min. wheel diam.: 1000 mm - 39,37 in.

(*) Max. rudder torque calculated at a working pressure of 70 bar/1000 psi. See the specific heavy duty pumps section on page 14 for more information.
(**) To be used when the hose length between pump and cylinder exceeds 15 mt - 45'.

Pump	# of stations	Kit Fittings Code		Valve and Bypass Code				Type and length of copper tube between pump and cylinder	
		< 15 mt - 45'	> 15 mt - 45'	Non return valve	Relief valve	Non return valve Bypass	Manual Bypass		
P89	1	IT14360 x 2 Qty.			IT23501	IT17672		Copper tube d.e. 14 x 1 mm	< 15 mt - 45'
	1		IT14361 x 2 Qty.		IT23503	IT15709		Copper tube d.e. 18 x 1,5 mm	> 15 mt - 45'
	2	IT23493		IT23513	IT23501		IT12134	Copper tube d.e. 14 x 1 mm	< 15 mt - 45'
	2		IT23452		IT23503	IT15709 x 2 Qty.		Copper tube d.e. 18 x 1,5 mm	> 15 mt - 45'
P105	1	Included			IT23503	IT15709		Copper tube d.e. 18 x 1,5 mm	Any length
	2	IT23518			IT23503	IT15709 x 2 Qty.		Copper tube d.e. 18 x 1,5 mm	Any length

Steering Effort Key LIGHT NORMAL HEAVY

SYSTEM 11

SINGLE-Station Steering System				DOUBLE-Station Steering System			
Components	**Model**	**Code**	**Qty.**	**Components**	**Model**	**Code**	**Qty.**
Cylinder	CTE600	IT15700	1	Cylinder	CTE600	IT15700	1
Flexible hoses for cylinder	Included	/	2	Flexible hoses for cylinder	Included	/	2
Main station pump	P89S P105 P151 P191	IT14002 IT14052 IT14082 IT14084	1	Main station pump	P89T P105 P151 P191	IT14003 IT14052 IT14082 IT14084	1
Second station pump	/	/	/	Second station pump	P89S P105 P151 P191	IT14002 IT14052 IT14082 IT14084	1
Pump fittings kit		IT14360 IT14361**	2	Pump fittings kit	See table on page bottom		1
Suggested min. hose size	Copper tube d.e.14 x 1 mm or Copper tube d.e.18 x 1,5 mm**		/	Suggested min. hose size	Copper tube d.e.14 x 1 mm or Copper tube d.e.18 x 1,5 mm**		/
Hydraulic oil	VG22	IT21334	4	Hydraulic oil	VG22	IT21334	4
See on page bottom for bypass and valve selection according to pump type and tube length							
In case of autopilot installation please add:							
Autopilot power unit	Choose autopilot power unit model in the Order Guide on pages 43-44		1	Fittings kit for autopilot	Choose autopilot power unit model in the Order Guide on pages 43-44		1

PUMP-CYLINDER COMBINATION

Choose combination between pump and cylinder according to the desired number of wheel turns lock-to-lock. Note: the requested effort on the steering wheel is inversely proportional to the wheel turns number lock-to-lock:
- less wheel turns, more effort
- more wheel turns, less effort

Note: by increasing the wheel diameter within the specified limitations, the requested effort is reduced.

HELM PUMP					
	P89T Cod. IT14003 (*)	P89S Cod. IT14002 (*)	P105 Cod. IT14052 (*)	P151 Cod. IT14082 (*)	P191 Cod. IT14084 (*)
CYLINDER CTE600 Cod. / Part # IT15700	No. of wheel turns: 14,8 Copper tube d.e. 14x1 mm or copper tube d.e. 18x1,5 mm (**) Tiller: 175 mm/6,89 in. Angle: 35° + 35° Torque: 660 Kgm/57387 lb.in. Min. wheel diam.: 700 mm - 27,56 in.	No. of wheel turns: 12,6 Copper tube d.e. 14x1 mm or copper tube d.e. 18x1,5 mm (**) Tiller: 175 mm/ 6,89 in. Angle: 35° + 35° Torque: 660 Kgm/ 57387 lb.in. Min. wheel diam.: 1000 mm-39,37 in.	No. of wheel turns: 8,7 Copper tube d.e. 14x1 mm or copper tube d.e. 18x1,5 mm (**) Tiller: 175 mm/ 6,89 in. Angle: 35°+35° Torque: 660 Kgm/ 57387 lb.in. Min. wheel diam.: 1000 mm-39,37 in.	No. of wheel turns: 6,9 Copper tube d.e. 14x1 mm or copper tube d.e. 18x1,5 mm (**) Tiller: 175 mm/ 6,89 in. Angle: 35°+35° Torque: 660 Kgm/ 57387 lb.in. Min. wheel diam.: 1000 mm-39,37 in.

(*) Max. rudder torque calculated at a working pressure of 70 bar/1000 psi. See the specific heavy duty pumps section on page 14 for more information.
(**) To be used when the hose length between pump and cylinder exceeds 15 mt - 45'.

Pump	# of stations	Kit Fittings Code		Valve and Bypass Code				Type and length of copper tube between pump and cylinder	
		< 15 mt - 45'	> 15 mt - 45'	Non return valve	Relief valve	Non return valve Bypass	Manual Bypass		
P89	1	IT14360 x 2 Qty.			IT23501	IT17672		Copper tube d.e. 14 x 1 mm	< 15 mt - 45'
	1		IT14361 x 2 Qty.		IT23503	IT15709		Copper tube d.e. 18 x 1,5 mm	> 15 mt - 45'
	2	IT23493		IT23513	IT23501		IT12134	Copper tube d.e. 14 x 1 mm	< 15 mt - 45'
	2		IT23452		IT23503	IT15709 x 2 Qty.		Copper tube d.e. 18 x 1,5 mm	> 15 mt - 45'
P105 P151 P191	1	Included			IT23503	IT15709		Copper tube d.e. 18 x 1,5 mm	Any length
	2	IT23518			IT23503	IT15709 x 2 Qty.		Copper tube d.e. 18 x 1,5 mm	Any length

SYSTEM 12

SINGLE-Station Steering System				DOUBLE-Station Steering System			
Components	**Model**	**Code**	**Qty.**	**Components**	**Model**	**Code**	**Qty.**
Cylinder	CTE900	IT15701	1	Cylinder	CTE900	IT15701	1
Flexible hoses for cylinder	Included	/	2	Flexible hoses for cylinder	Included	/	2
Main station pump	P105 P151 P191	IT14052 IT14082 IT14084	1	Main station pump	P105 P151 P191	IT14052 IT14082 IT14084	1
Second station pump	/	/	/	Second station pump	P105 P151 P191	IT14052 IT14082 IT14084	1
Pump fittings kit	Included	/	/	Pump fittings kit		IT23518	1
Suggested min. hose size	Copper tube d.e.18 x 1,5 mm		/	Suggested min. hose size	Copper tube d.e.18 x 1,5 mm		/
Hydraulic oil	VG22	IT21334	4	Hydraulic oil	VG22	IT21334	4
See on page bottom for bypass and valve selection according to pump type and tube length							
In case of autopilot installation please add:							
Autopilot power unit	Choose autopilot power unit model on pages 43-44		1	Fittings kit for autopilot	Choose autopilot power unit model on pages 43-44		1

PUMP-CYLINDER COMBINATION

Choose combination between pump and cylinder according to the desired number of wheel turns lock-to-lock. Note: the requested effort on the steering wheel is inversely proportional to the wheel turns number lock-to-lock:
- less wheel turns, more effort
- more wheel turns, less effort

Note: by increasing the wheel diameter within the specified limitations, the requested effort is reduced.

HELM PUMP		
 P105 Cod. IT14052 (*)	 P151 Cod. IT14082 (*)	 P191 Cod. IT14084 (*)
CYLINDER CTE900 Cod. / Part # IT15701	No. of wheel turns: 18,8 Copper tube d.e. 18x1,5 mm Tiller: 260 mm / 10,24 in. Angle: 35° + 35° Torque: 989 Kgm / 85993 lb.in. Min. wheel diam.: 1000 mm - 39,73 in.	No. of wheel turns: 13,1 Copper tube d.e. 18x1,5 mm Tiller: 260 mm / 10,24 in. Angle: 35° + 35° Torque: 989 Kgm / 85993 lb.in. Min. wheel diam.: 1000 mm - 39,73 in.	No. of wheel turns: 10,4 Copper tube d.e. 18x1,5 mm Tiller: 260 mm / 10,24 in. Angle: 35° + 35° Torque: 989 Kgm / 85993 lb.in. Min. wheel diam.: 1000 mm - 39,73 in.

(*) Max. rudder torque calculated at a working pressure of 70 bar/1000 psi. See the specific heavy duty pumps section on page 14 for more information.

Pump	# of stations	Kit Fittings Code		Valve and Bypass Code				Type and length of copper tube between pump and cylinder	
		< 15 mt - 45'	> 15 mt - 45'	Non return valve	Relief valve	Non return valve Bypass	Manual Bypass		
P105 P151 P191	1	Included			IT23503	IT15709		Copper tube d.e. 18 x 1,5 mm	Any length
	2	IT23518			IT23503	IT15709 x 2 Qty.		Copper tube d.e. 18 x 1,5 mm	Any length

Steering Effort Key LIGHT NORMAL HEAVY

SYSTEM 13

SINGLE-Station Steering System				DOUBLE-Station Steering System			
Components	**Model**	**Code**	**Qty.**	**Components**	**Model**	**Code**	**Qty.**
Cylinder	CTE1200	IT15702	1	Cylinder	CTE1200	IT15702	1
Flexible hoses for cylinder	Included	/	2	Flexible hoses for cylinder	Included	/	2
Main station pump	P151 P191	IT14082 IT14084	1	Main station pump	P151 P191	IT14082 IT14084	1
Second station pump	/	/	/	Second station pump	P151 P191	IT14082 IT14084	1
Pump fittings kit	Included	/	/	Pump fittings kit		IT23518	1
Suggested min. hose size	Copper tube d.e.18 x 1,5 mm		/	Suggested min. hose size	Copper tube d.e.18 x 1,5 mm		/
Hydraulic oil	VG22	IT21334	4	Hydraulic oil	VG22	IT21334	4
See on page bottom for bypass and valve selection according to pump type and tube length							
In case of autopilot installation please add:							
Autopilot power unit	Choose autopilot power unit model on pages 43-44		1	Fittings kit for autopilot	Choose autopilot power unit model on pages 43-44		1

PUMP-CYLINDER COMBINATION

Choose combination between pump and cylinder according to the desired number of wheel turns lock-to-lock. Note: the requested effort on the steering wheel is inversely proportional to the wheel turns number lock-to-lock:
- less wheel turns, more effort
- more wheel turns, less effort

Note: by increasing the wheel diameter within the specified limitations, the requested effort is reduced.

HELM PUMP

P151
Cod. IT14082 (*)

No. of wheel turns: 17,5
Copper tube d.e. 18x1,5 mm
Tiller: 350 mm / 13,78 in.
Angle: 35° + 35°
Torque: 1318 Kgm / 114601 lb.in.
Min. wheel diam.: 1000 mm - 39,37 in.

P191
Cod. IT14084 (*)

No. of wheel turns: 13,8
Copper tube d.e. 18x1,5 mm
Tiller: 350 mm / 13,78 in.
Angle: 35° + 35°
Torque: 1318 Kgm / 114601 lb.in.
Min. wheel diam.: 1000 mm - 39,37 in.

CYLINDER

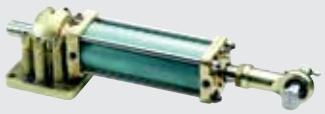

CTE1200
Cod. / Part # IT15702

(*) Max. rudder torque calculated at a working pressure of 70 bar/1000 psi. See the specific heavy duty pumps section on page 14 for more information.

Pump	# of stations	Kit Fittings Code		Valve and Bypass Code				Type and length of copper tube between pump and cylinder	
		< 15 mt - 45'	> 15 mt - 45'	Non return valve	Relief valve	Non return valve Bypass	Manual Bypass		
P151 P191	1	Included			IT23503	IT15709		Copper tube d.e. 18 x 1,5 mm	Any length
	2	IT23518			IT23503	IT15709 x 2 Qty.		Copper tube d.e. 18 x 1,5 mm	Any length

SYSTEM 14

SINGLE-Station Steering System				DOUBLE-Station Steering System			
Components	**Model**	**Code**	**Qty.**	**Components**	**Model**	**Code**	**Qty.**
Cylinder	CTF1600	IT15703	1	Cylinder	CTF1600	IT15703	1
Flexible hoses for cylinder	Included	/	2	Flexible hoses for cylinder	Included	/	2
Main station pump	P191	IT14084	1	Main station pump	P191	IT14084	1
Second station pump	/	/	/	Second station pump	P191	IT14084	1
Pump fittings kit	Included	/	/	Pump fittings kit		IT23518	1
Suggested min. hose size	Copper tube d.e.18 x 1,5 mm		/	Suggested min. hose size	Copper tube d.e.18 x 1,5 mm		/
Hydraulic oil	VG22	IT21334	4	Hydraulic oil	VG22	IT21334	4
See on page bottom for bypass and valve selection according to pump type and tube length							
In case of autopilot installation please add:							
Autopilot power unit	Choose autopilot power unit model in the Order Guide on pages 43-44		1	Fittings kit for autopilot	Choose autopilot power unit model in the Order Guide on pages 43-44		1

PUMP-CYLINDER COMBINATION

Choose combination between pump and cylinder according to the desired number of wheel turns lock-to-lock. Note: the requested effort on the steering wheel is inversely proportional to the wheel turns number lock-to-lock:
- less wheel turns, more effort
- more wheel turns, less effort

Note: by increasing the wheel diameter within the specified limitations, the requested effort is reduced.

HELM PUMP

P191
Cod. IT14084 (*)

CYLINDER

CTF1600
Cod. / Part # IT15703

No. of wheel turns: 20,2
Copper tube d.e. 18x1,5 mm
Tiller: 350 mm / 13,78 in.
Angle: 35° + 35°
Torque: 1928 Kgm / 167640 lb.in.
Min. wheel diam.: 1000 mm - 39,37 in.

(*) Max. rudder torque calculated at a working pressure of 70 bar/1000 psi. See the specific heavy duty pumps section on page 14 for more information.

Pump	# of stations	Kit Fittings Code		Valve and Bypass Code				Type and length of copper tube between pump and cylinder	
		< 15 mt - 45'	> 15 mt - 45'	Non return valve	Relief valve	Non return valve Bypass	Manual Bypass		
P191	1	Included			IT23503	IT15709		Copper tube d.e. 18 x 1,5 mm	Any length
	2	IT23518			IT23503	IT15709 x 2 Qty.		Copper tube d.e. 18 x 1,5 mm	Any length

Steering Effort Key LIGHT NORMAL HEAVY

INBOARD STEERING CYLINDERS

- SERIES CTA

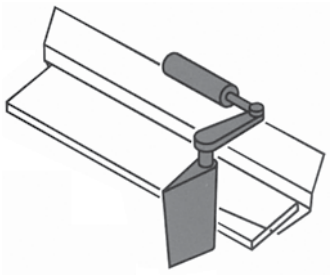

Features

- Cylinder body in anodized aluminum
- Piston rod in stainless steel for a high corrosion resistance
- Adjustable base either horizontally or vertically
- Available in a range of volumes between 115 and 215cc
- Supplied with bleeders
- Meet ABYC standards

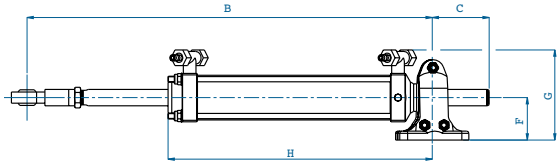

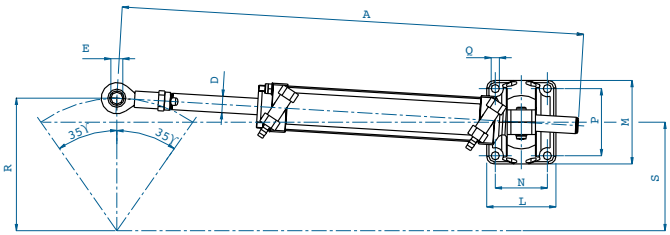

TECHNICAL SPECIFICATIONS

DIMENSIONS																
Model	Stroke	A	B	C	D	E	F	G	H	L	M	N	P	Q	R	S
CTA40U	178 mm	555 mm	459 mm	96 mm	14 mm	19,05 mm	35 mm	86 mm	298 mm	62 mm	90 mm	40 mm	73 mm	8,5 mm	153 mm	127 mm
	7.0 in.	21.85 in.	18 in.	3.78 in	0.55 in.	3/4 in.	1.38 in.	3.39 in.	11.73 in.	2.44 in.	3.54 in.	1.57 in.	2.87 in.	0.33 in.	6.0 in.	5.0 in.
CTA65U	178 mm	586 mm	495 mm	91 mm	20 mm	19,05 mm	40 mm	91 mm	305 mm	60 mm	125 mm	40 mm	105 mm	8,5 mm	153 mm	127 mm
	7.0 in.	23 in.	19.49 in.	3.58 in.	0.79 in.	3/4 in.	1.57 in.	3.58 in.	12.0 in.	2.36 in.	4.92 in.	1.57 in.	4.13 in.	0.33 in.	6.0 in.	5.0 in.
CTA75U	200 mm	630 mm	528 mm	102 mm	20 mm	19,05 mm	40 mm	91 mm	327 mm	60 mm	125 mm	40 mm	105 mm	8,5 mm	175 mm	143 mm
	7.87 in.	24.8 in.	20.79 in.	4.0 in.	0.79 in.	3/4 in.	1.57 in.	3.58 in.	12.87 in.	2.36 in.	4.92 in.	1.57 in.	4.13 in.	0.33 in.	6.89 in.	5.6 in.
CTA80U	228 mm	690 mm	573 mm	117 mm	20 mm	19,05 mm	40 mm	91 mm	355 mm	60 mm	125 mm	40 mm	105 mm	8,5 mm	200 mm	164 mm
	9.0 in.	27.16 in.	22.56 in.	4.61 in.	0.79 in.	3/4 in.	1.57 in.	3.58 in.	13.98 in.	2.36 in.	4.92 in.	1.57 in.	4.13 in.	0.33 in.	7.87 in.	6.5 in.

TECHNICAL DETAILS									
Model	Code	Stroke	Rudder Torque	Thrust at 70 bar - 1000 psi	Volume	Tiller	Angle	Fittings	Weight
CTA40U	IT15649	178 mm	57.83 Kgm	455 Kgf	115.7 cc	153 mm	35°+35°	1/4" NPT - 3/8" O.D.	2,2 Kg
		7.0 in	5008 in/lb	1002 lbf	7.1 cu.in	6 in.			4,85 lb
CTA65U	IT12677	178 mm	83.81 Kgm	659.4 Kgf	167.68 cc	153 mm	35°+35°	1/4" NPT - 3/8" O.D.	2,6 Kg
		7.0 in	7257 in/lb	1453 lbf	10.23 cu.in	6 in.			5,73 lb
CTA75U	IT15763	200 mm	94.17 Kgm	659.4 Kgf	188.4 cc	175 mm	35°+35°	1/4" NPT - 3/8" O.D.	3,0 Kg
		7.78 in	8155 in/lb	1453 lbf	11.5 cu.in	6.9 in.			6,61 lb
CTA80U	IT12682	228 mm	107.36 Kgm	659.4 Kgf	214.78 cc	200 mm	35°+35°	1/4" NPT - 3/8" O.D.	3,2 Kg
		9.0 in	9297 in/lb	1453 lbf	13.11 cu.in	7.8 in.			7,05 lb

NOTE: The inboard cylinders mod. CTA are not suitable for installations on racing boats. The cylinders mod. CTA are provided with inch fittings. Version with metric fittings are also available. Please specify when placing the order.

INBOARD STEERING CYLINDERS

- SERIES CTB

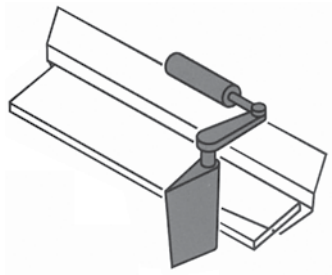

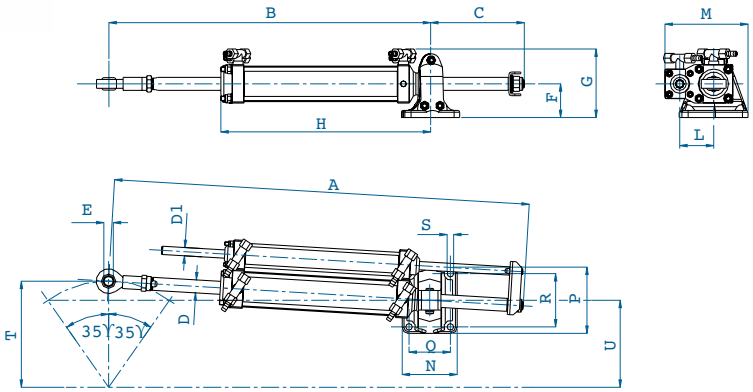

Features

- Cylinder body in brass
- Piston rod in stainless steel for a high corrosion resistance
- Adjustable base either horizontally or vertically
- Available in a range of volumes between 281 and 360 cc
- Supplied with bleeders
- Meet ABYC standards

TECHNICAL SPECIFICATIONS

DIMENSIONS																
Model	Stroke	A	B	C	D	E	F	G	H	L	M	N	P	Q	R	S
CTB110U	178 mm	585 mm	521 mm	64 mm	22 mm	19,05 mm	57 mm	121 mm	329 mm	93 mm	112 mm	70 mm	90 mm	11 mm	153 mm	127 mm
	7.0 in.	22.99 in.	20.51 in.	2.52 in.	0.87 in.	3/4 in.	2.24 in.	4.76 in.	12.95 in.	3.66 in.	4.40 in.	2.75 in.	3.54 in.	0.43 in.	6.0 in.	5.0 in.
CTB130U	204 mm	622 mm	545 mm	77 mm	22 mm	16 mm	57 mm	121 mm	355 mm	93 mm	112 mm	70 mm	90 mm	11 mm	180 mm	147 mm
	8.0 in.	24.45 in.	21.46 in.	3.03 in.	0.87 in.	0.63 in.	2.24 in.	4.76 in.	13.98 in.	3.66 in.	4.40 in.	2.75 in.	3.54 in.	0.43 in.	7.08 in.	5.78 in.
CTB145U	228 mm	685 mm	596 mm	89 mm	22 mm	19,05 mm	57 mm	121 mm	379 mm	93 mm	112 mm	70 mm	90 mm	11 mm	200 mm	164 mm
	9.0 in.	26.93 in.	23.46 in.	3.5 in.	0.87 in.	3/4 in.	2.24 in.	4.76 in.	14.92 in.	3.66 in.	4.40 in.	2.75 in.	3.54 in.	0.43 in.	7.87 in.	6.5 in.

TECHNICAL DETAILS									
Model	Code	Stroke	Rudder Torque	Thrust at 70 bar - 1000 psi	Volume	Tiller	Angle	Fittings	Weight
CTB110U	IT12687	178 mm	140.85 Kgm	1108 Kgf	281.77 cc	153 mm	35°+35°	3/8 ” NPT - 1/2” O.D.	8,6 Kg
		7 in.	12197 in/lb	2442 lbf	17.19 cu.in	6 in.			18,95 lb
CTB130U	IT12691	204 mm	161.42 Kgm	1108 Kgf	322.93 cc	180 mm	35°+35°	3/8 ” NPT - 1/2” O.D.	8,8 Kg
		8 in.	13978 in/lb	2442 lbf	19.71 cu.in	7 in.			19,40 lb
CTB145U	IT12694	228 mm	180.41 Kgm	1108 Kgf	360.92 cc	200 mm	35°+35°	3/8 ” NPT - 1/2” O.D.	9,4 Kg
		9 in.	15623 in/lb	2442 lbf	22 cu.in	7.8 in.			20,72 lb

NOTE: The inboard cylinders mod. CTB are not suitable for installations on racing boats. The cylinders mod. CTB are provided with inch fittings. Version with metric fittings are also available. Please specify when placing the order.

INBOARD HEAVY DUTY CYLINDERS

• SERIES CTC

Features

- Piston rod in stainless steel for a high corrosion resistance
- Adjustable base either horizontally or vertically
- Available in a range of volumes between 500 and 1000 cc
- Supplied with bleeders
- Meet ABYC standards

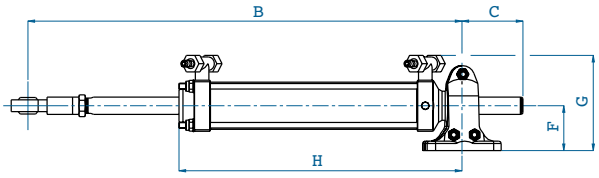

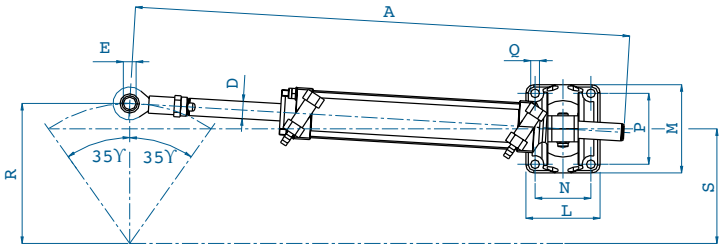

TECHNICAL SPECIFICATIONS

DIMENSIONS																
Model	Stroke	A	B	C	D	E	F	G	H	L	M	N	P	Q	R	S
CTC200	200 mm	733 mm	607 mm	127 mm	28 mm	25 mm	55 mm	133 mm	385 mm	100 mm	140 mm	72 mm	112 mm	11 mm	175 mm	143 mm
	7.87 in.	28.86 in.	23.9 in.	5.0 in.	1.10 in.	0.98 in.	2.17 in.	5,25 in.	16.16 in.	3.94 in.	5.51 in.	2.83 in.	4.41 in.	0.43 in.	6.89 in.	5.6 in.
CTC230	228 mm	789 mm	649 mm	141 mm	28 mm	25 mm	55 mm	133 mm	413 mm	100 mm	140 mm	72 mm	112 mm	11 mm	200 mm	164 mm
	9.0 in.	31.0 in.	25.55 in.	5.55 in.	1.10 in.	0.98 in.	2.17 in.	5,25 in.	16.26 in.	3.94 in.	5.51 in.	2.83 in.	4.41 in.	0.43 in.	7.87 in.	6.5 in.
CTC300	300 mm	933 mm	757 mm	177 mm	28 mm	25 mm	55 mm	133 mm	485 mm	100 mm	140 mm	72 mm	112 mm	11 mm	260 mm	215 mm
	11.81 in.	36.73 in.	29.8 in.	6.97 in.	1.10 in.	0.98 in.	2.17 in.	5,25 in.	19.09 in.	3.94 in.	5.51 in.	2.83 in.	4.41 in.	0.43 in.	10.24 in.	8.5 in.
CTC400	400 mm	1133 mm	907 mm	227 mm	28 mm	25 mm	55 mm	133 mm	585 mm	100 mm	140 mm	72 mm	112 mm	11 mm	350 mm	286 mm
	15.75 in.	44.61 in.	35.71 in.	8.94 in.	1.10 in.	0.98 in.	2.17 in.	5,25 in.	23.0 in.	3.94 in.	5.51 in.	2.83 in.	4.41 in.	0.43 in.	13.78 in.	11.3 in.

TECHNICAL DETAILS									
Model	Code	Stroke	Rudder Torque	Thrust at 70 bar - 1000 psi	Volume	Tiller	Angle	Fittings	Weight
CTC200	IT12695	200 mm	249.93 Kgm	1750 Kgf	500 cc	175 mm	35°+35°	G1/2" - d.12mm	13,2 Kg
		7.87 in.	21643 in/lb	3857 lbf	30.5 cu.in	6.9 in.			29,10 lb
CTC230	IT12698	228 mm	284.92 Kgm	1750 Kgf	570 cc	200 mm	35°+35°	G1/2" - d.12mm	15,3 Kg
		9 in.	24674 in/lb	3857 lbf	34.78 cu.in	7.8 in.			33,73 lb
CTC300	IT12701	300 mm	374.89 Kgm	1750 Kgf	750 cc	260 mm	35°+35°	G1/2" - d.12mm	17,7 Kg
		11.81 in.	32465 in/lb	3857 lbf	45.77 cu.in	10.2 in.			39,02 lb
CTC400	IT15697	400 mm	499.85 Kgm	1750 Kgf	1000 cc	350 mm	35°+35°	G1/2" - d.12mm	20,0 Kg
		15.75 in.	43287 in/lb	3857 lbf	61.02 cu.in	13.7 in.			44,1 lb

NOTE: The inboard cylinders mod CTC are not suitable for installations on racing boats. The cylinders mod CTC are provided with flexible hoses type SAE100 R1.

INBOARD HEAVY DUTY CYLINDERS

- SERIES CTD

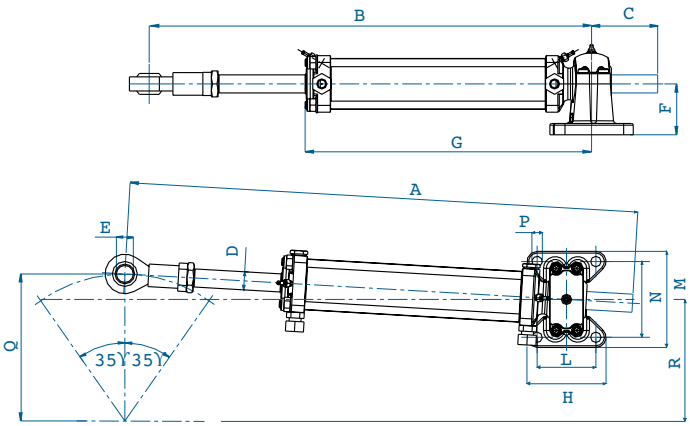

Features

- Piston rod in stainless steel for a high corrosion resistance
- Adjustable base either horizontally or vertically
- Available in a range of volumes between 844 and 1266 cc
- Supplied with bleeders
- Meet ABYC standards

TECHNICAL SPECIFICATIONS

DIMENSIONS															
Model	Stroke	A	B	C	D	E	F	G	H	L	M	N	P	Q	R
CTD310	200 mm	700 mm	633 mm	67 mm	32 mm	30 mm	90 mm	410 mm	140 mm	104 mm	170 mm	134 mm	18,5 mm	175 mm	143 mm
	7.87in.	27.55 in.	24.92 in.	2.63 in.	1.25 in.	1.18 in.	3.54 in.	16.14 in.	5.51 in.	4.09 in.	25.4 in.	5.27 in.	0.72 in.	6.88 in.	5.62 in.
CTD450	300 mm	900 mm	783 mm	117 mm	32 mm	30 mm	90 mm	510 mm	140 mm	104 mm	170 mm	134 mm	18,5 mm	260 mm	215 mm
	11.81 in.	35.43 in.	30.82 in.	4.60 in.	1.25 in.	1.18 in.	3.54 in.	20.07 in.	5.51 in.	4.09 in.	25.4 in.	5.27 in.	0.72 in.	10.20 in.	8.44 in.

TECHNICAL DETAILS									
Model	Code	Stroke	Rudder Torque	Thrust at 70 bar - 1000 psi	Volume	Tiller	Angle	Thread	Weight
CTD310	IT15698	200 mm	421 Kgm	2954 Kgf	844 cc	175 mm	35°+35°	1/2”	23 Kg
		7.87 in.	36459 in/lb	6510 lbf	51,50 cu.in	6.9 in.			50,70 lb
CTD450	IT15699	300 mm	633 Kgm	2954 Kgf	1266 cc	260 mm	35°+35°	1/2”	25,6 Kg
		11.81 in.	54818 in/lb	6510 lbf	77,25 cu.in	10.2 in.			56,43 lb

NOTE: The inboard cylinders mod CTD are not suitable for installations on racing boats.
The cylinders mod CTD are provided with flexible hoses type SAE100 R1.

INBOARD HEAVY DUTY CYLINDERS

- SERIES CTE

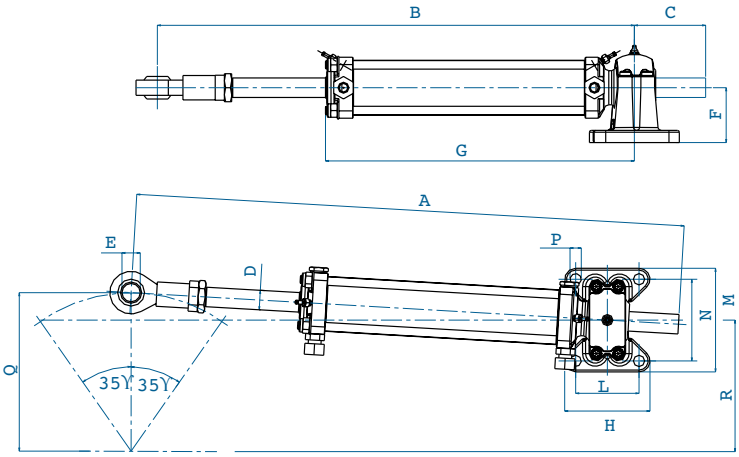

Features

- Piston rod in stainless steel for a high corrosion resistance
- Adjustable base either horizontally or vertically
- Available in a range of volumes between 844 and 1266 cc
- Supplied with bleeders
- Meet ABYC standards

TECHNICAL SPECIFICATIONS

DIMENSIONS															
Model	Stroke	A	B	C	D	E	F	G	H	L	M	N	P	Q	R
CTE600	200 mm	735 mm	695 mm	40 mm	40 mm	35 mm	102 mm	450 mm	182 mm	143 mm	198 mm	160 mm	18,5 mm	175 mm	143 mm
	7.87in.	28.93 in.	27.36 in.	1.57 in.	1.57 in.	1.37 in.	4.01 in.	17.71 in.	7.16 in.	5.62 in.	7.79 in.	6.29 in.	0.72 in.	6.88 in.	5.62 in.
CTE900	300 mm	935 mm	845 mm	90 mm	40 mm	35 mm	102 mm	555 mm	182 mm	143 mm	198 mm	160 mm	18,5 mm	260 mm	215 mm
	11.81 in.	36.81 in.	33.26 in.	3.54 in.	1.57 in.	1.37 in.	4.01 in.	21.85 in.	7.16 in.	5.62 in.	7.79 in.	6.29 in.	0.72 in.	10.20 in.	8.44 in.
CTE1200	400 mm	1135 mm	995 mm	140 mm	40 mm	35 mm	102 mm	650 mm	182 mm	143 mm	198 mm	160 mm	18,5 mm	350 mm	286 mm
	15.75 in.	44.68 in.	37.59 in.	5.51 in.	1.57 in.	1.37 in.	4.01 in.	25.59 in.	7.16 in.	5.62 in.	7.79 in.	6.29 in.	0.72 in.	13.77 in.	11.25 in.

TECHNICAL DETAILS									
Model	Code	Stroke	Rudder Torque	Thrust at 70 bar - 1000 psi	Volume	Tiller	Angle	Thread	Weight
CTE600	IT15700	200 mm	659 Kgm	4616 Kgf	1318 cc	175 mm	35°+35°	1/2"	38,5 Kg
		7.87 in.	57069 in/lb	10173 lbf	21598 cu.in	6.9 in.			85 lb
CTE900	IT15701	300 mm	988 Kgm	4616 Kgf	1978 cc	260 mm	35°+35°	1/2"	38,8 Kg
		11.81 in.	85560 in/lb	10173 lbf	32413 cu.in	10.2 in.			85,5 lb
CTE1200	IT15702	400 mm	1318 Kgm	4616 Kgf	2637 cc	350 mm	35°+35°	1/2"	42,0 Kg
		15.75 in.	114138 in/lb	10173 lbf	43213 cu.in	13.7 in.			92,6 lb

NOTE: The inboard cylinders mod CTE are not suitable for installations on racing boats.
The cylinders mod CTE are provided with flexible hoses type SAE100 R1.

INBOARD HEAVY DUTY CYLINDERS

- SERIES CTF

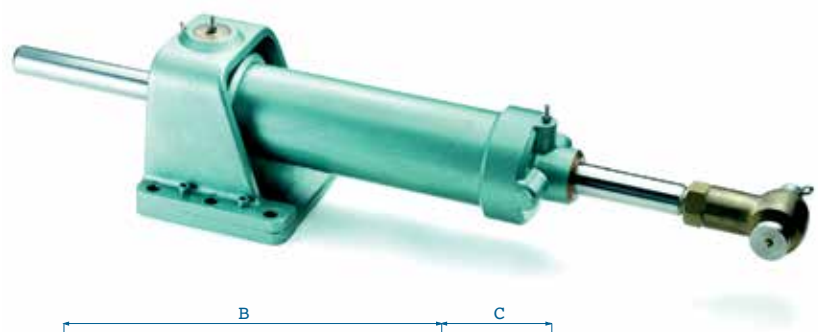

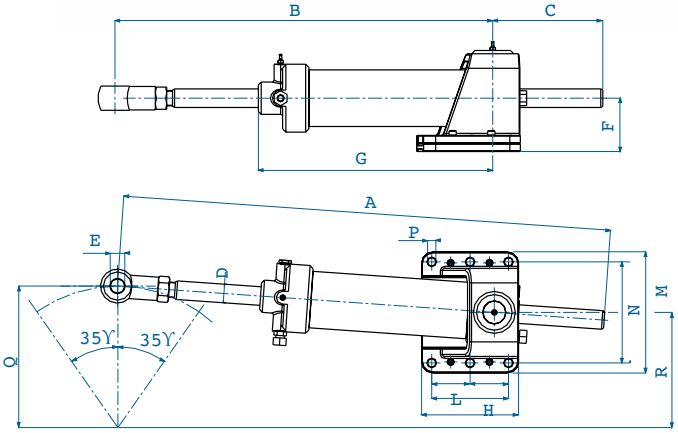

Features

- Piston rod in stainless steel for a high corrosion resistance
- Adjustable base either horizontally or vertically
- Available in a range of volumes between 844 and 1266 cc
- Supplied with bleeders
- Meet ABYC standards

TECHNICAL SPECIFICATIONS

DIMENSIONS															
Model	Stroke	A	B	C	D	E	F	G	H	L	M	N	P	Q	R
CTF1600	400 mm	1205 mm	935 mm	270 mm	46 mm	36 mm	130 mm	580 mm	240 mm	190 mm	300 mm	250 mm	20,5 mm	350 mm	286 mm
	15.75 in.	47.44 in.	36.81 in.	10.62 in.	1.81 in.	1.41 in.	5.11 in.	22.83 in.	9.44 in.	7.48 in.	11.81 in.	9.84 in.	0.80 in.	13.77 in.	11.25 in.

TECHNICAL DETAILS									
Model	Code	Stroke	Rudder Torque	Thrust at 70 bar - 1000 psi	Volume	Tiller	Angle	Thread	Weight
CTF1600	IT15703	400 mm	1928 Kgm	6750 Kgf	3857 cc	350 mm	35°+35°	1/2”	78,8 Kg
		15.75 in.	166964 in/lb	14850 lbf	235,27 cu.in	13,77 in.			173,72 lb

NOTE: The inboard cylinders mod CTF are not suitable for installations on racing boats.
The cylinders mod CTF are provided with flexible hoses type SAE100 R1.

MANUAL INBOARD STEERING SYSTEMS ORDER GUIDE

APPLICATION GUIDE ACCORDING TO BOAT LENGTH AND TYPE

Boat length LOA	System to order							
	Planing Hull				Displacement Hull			
	1 Engine		2 Engines		1 Engine		2 Engines	
	Pleasure	Working	Pleasure	Working	Pleasure	Working	Pleasure	Working
Up to 8mt / 26ft	1	2	1	2	1	2	1	2
8 - 9,8mt / 26 - 32ft	1	2	1	2	2	3	2	3
9,8 - 11,6mt / 32 - 38ft	2	3	2	3	3	4	2	3
11,6 - 13,4mt / 38 - 44ft	3	4	2	4	4	6	3	5
13,4 - 15,3mt / 44 - 50ft	7	7	4	5	6	7	5	6
15,5 - 16,8mt / 50 - 55ft	8	9	5	6	7	8	7	8
16,8 - 18mt / 55 - 60ft	8	9	6	7	8	8	8	8
18 - 19,8mt / 60 - 65ft	/	/	8	/	8	9	8	9
19,8 - 21mt / 65 - 70ft	/	/	8	/	9	9	9	10
21 - 22,8mt / 70 - 75ft	/	/	9	/	10	11	10	11
22,8 - 24,3mt / 75- 80ft	/	/	9	/	10	11	10	11
over 24,3 mt / 80ft	For boat lengths over 24,3 mt / 80 ft please contact our technical department to check applications suggested on systems 12-14							

WARNING! The above suggestions shall be intended as merely INDICATIVE. To check the proper application the required max torque must be calculated. If the required information is not available please contact our authorized dealer or service center and submit boat length, maximum speed and rudder dimensions.

WARNING! For displacement boats, hull speed normally does not exceed 18 knots.
For planing boats, the above steering systems are suggested for boat speeds under 30 knots.

CYLINDER		System to order
Mod.	Code	
CTA40U - CTA40	IT15649 - IT12675	System 1 (see pg. 17)
CTA65U - CTA65 CTA75U - CTA75	IT12677 - IT12676 IT15763 - IT12678	System 2 (see pg. 18)
CTA80U - CTA80	IT12682 - IT12679	System 3 (see pg. 19)
CTB110U - CTB110 CTB130U - CTB130	IT12687 - IT12683 IT12691 - IT15606	System 4 (see pg. 20)
CTB145U - CTB145	IT12694 - IT12692	System 5 (see pg. 21)
CTC200	IT12695	System 6 (see pg. 22)
CTC230	IT12698	System 7 (see pg. 23)
CTC300	IT12701	System 8 (see pg. 24)
CTC400 CTD310	IT15697 IT15698	System 9 (see pg. 25)
CTD450	IT15699	System 10 (see pg. 26)
CTE600	IT15700	System 11 (see pg. 27)
CTE900	IT15701	System 12 (see pg. 28)
CTE1200	IT15702	System 13 (see pg. 29)
CTF1600	IT15703	System 14 (see pg. 30)

AUTOPILOT POWER UNITS

The autopilot and other electronic navigation systems are more popular today on every type of vessel, even smaller ones. Since these modern technologies are more and more sophisticated it is necessary for the equipment to be able to exchange information and work together to guarantee safe navigation.

Twin Disc has developed a complete range of autopilot power units that represent the best interface for your autopilot.

Through thirty years of experience and research, we have learned the autopilot power unit range can provide simple solutions in terms of working principle and installation, while providing reliable and precise performance.

It is possible to choose among several types of units:

- SOLENOID - VALVE POWER UNITS
- SOLENOID - VALVE POWER UNITS WITH AUTOMATIC FILLING
- REVERSIBLE POWER UNITS

Each one of the types above is fully described in a dedicated section in this catalogue. Please check the different tables for the products characteristics and technical details. For the choice of the most suitable unit it is necessary to have the steering cylinder volume, from which the actuation time is calculated and the suitable model selected.

Features

- Reduced dimensions
- Great variety of models for any kind of application
- Availability of reversible and solenoid-valve Power Units
- Steering automatic filling device available on certain models for an easier and faster bleeding
- Interface with any autopilot
- High quality materials and components for the best reliability and performance

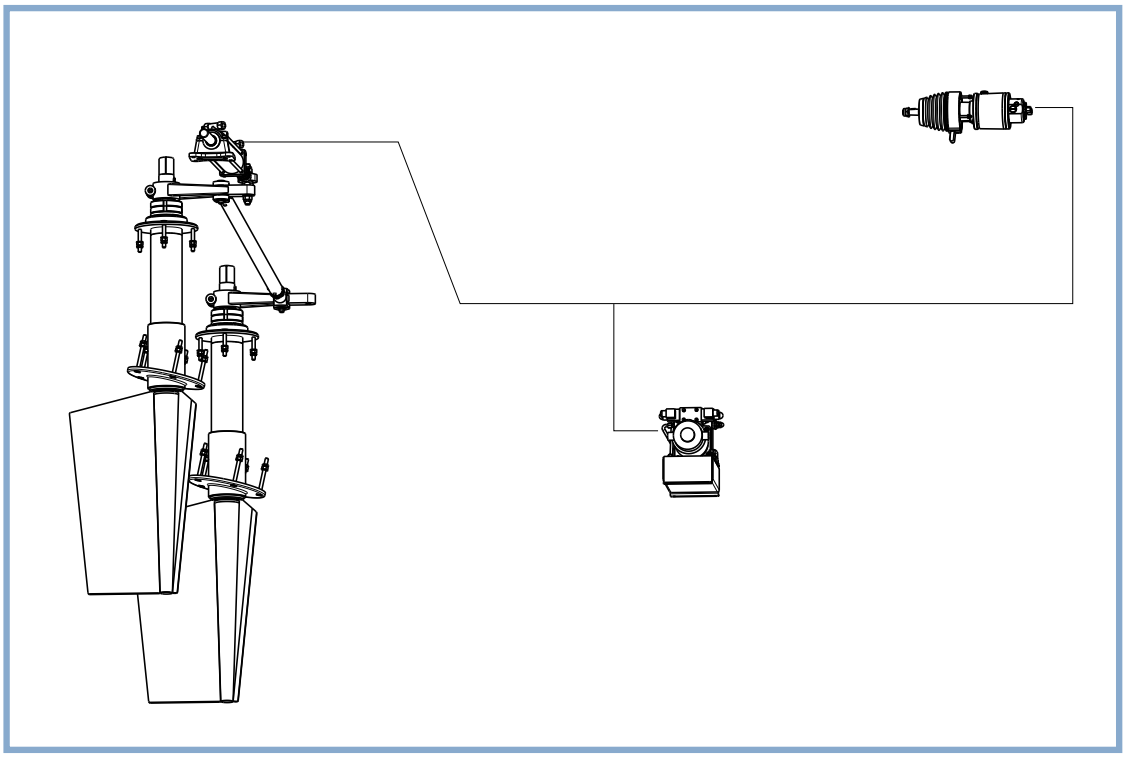

AUTOPILOT SOLENOID-VALVE POWER UNITS WITH AUTOMATIC FILLING DEVICE

• MOD. CO3RAU - CO4RAU

This is a special innovative version of the autopilot power unit with solenoid valves. This model has all the main features of the range which supply a safe and precise interface for the autopilot, but also is equipped with a special device that allows the automatic filling of the steering system.

The installation and working principle of these units are exactly the same as traditional units, but this additional device circulates oil automatically in the steering hoses as soon as the unit is switched on, allowing any air remaining in the system to go out through the designed bleeders.

In this way, the troublesome bleeding procedure becomes much easier and quicker (and nearly automatic) if the unit has not been used for some time. The steering wheel is turned occasionally from port to starboard and vice-versa.

The unit composition and its main features are exactly the same as for the normal solenoid-valve power units described in the previous section.

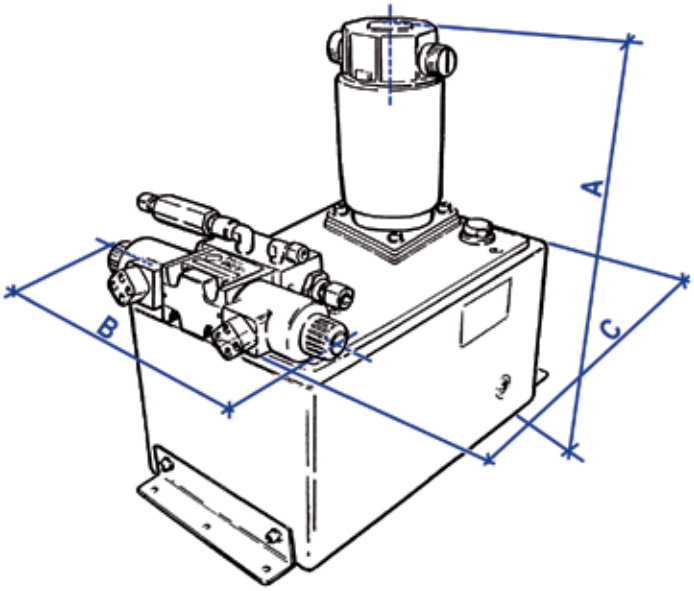

Features

- Available in two models for application with steering cylinders having a volume up to 500 cc
- Safe and precise interface with any autopilot
- Very compact design and reduced dimensions
- Supplied with solenoid-valves electro-magnetically actuated
- Special device for the steering automatic filling
- Easy and fast steering bleeding

TECHNICAL SPECIFICATIONS AND APPLICATIONS

DIMENSIONS			
Model	**A**	**B**	**C**
CO3RAU CO3RA	370 mm	230 mm	240 mm
	14,56 in.	9 in.	9,44 in.
CO4RAU CO4RA	370 mm	230 mm	380 mm
	14,56 in.	9 in.	14,96 in.

AUTOPILOT POWER UNITS WITH SOLENOID-VALVES

• MOD. C01NU - C03NU

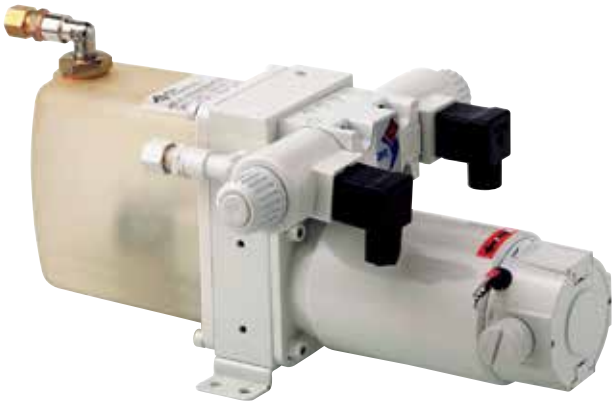

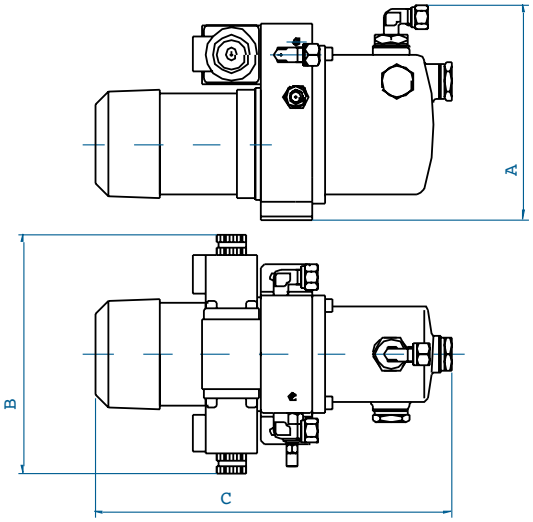

Autopilot power units with solenoid valves include several models with different characteristics and displacements to satisfy a wide application field on any type of boat. The system's major components are an electric motor, a hydraulic pump, an oil tank and an electromagnetically actuated valve group.

The unit dimensions allow installation in small, narrow areas, and the installation is very easy and fast. To select the most suitable model, first verify the steering cylinder volume and then select the suggested model on our Order Guide on pages 43-44. For any special application, please contact a specialized installer or dealer for help in the product selection.

Features

- Wide range of models with different displacements to satisfy any application
- Safe and precise interface with any autopilot
- Compact design
- Supplied with electro-magnetically actuated solenoid valves

TECHNICAL SPECIFICATIONS

DIMENSIONS			
Model	A	B	C
CO1NU CO1N	160 mm	185 mm	285 mm
	6,30 in.	7,28 in.	11,22 in.
CO2NU CO2N	160 mm	185 mm	285 mm
	6,30 in.	7,28 in.	11,22 in.
CO2/3NU CO2/3N	185 mm	185 mm	360 mm
	7,28 in.	7,28 in.	14,17 in.
CO3NU CO3N	185 mm	185 mm	360 mm
	7,28 in.	7,28 in.	14,17 in.

AUTOPILOT POWER UNITS WITH SOLENOID-VALVES

• MOD. C04 - C04/5

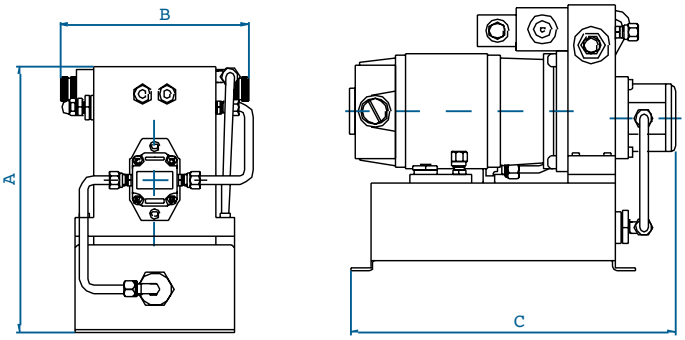

TECHNICAL SPECIFICATIONS

DIMENSIONS			
Model	A	B	C
C04	270 mm	200 mm	310 mm
	10,63 in.	7.8 in.	12,20 in.
C04/5	270 mm	200 mm	310 mm
	10,63 in.	7.8 in.	12,20 in.

AUTOPILOT POWER UNITS WITH SOLENOID-VALVES

• MOD. C07 - C016

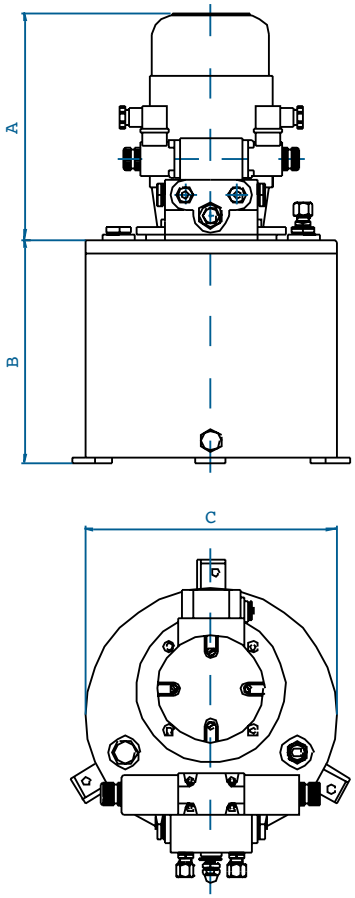

TECHNICAL SPECIFICATIONS

DIMENSIONS			
Model	A	B	C
C07	230 mm	230 mm	270 mm
	9,06 in.	9,06 in.	10,63 in.
C08	230 mm	230 mm	270 mm
	9,06 in.	9,06 in.	10,63 in.
C09	240 mm	310 mm	350 mm
	9,45 in.	12,20 in.	13,78 in.
C010	230 mm	230 mm	270 mm
	9,06 in.	9,06 in.	10,63 in.
C011	240 mm	310 mm	350 mm
	9,45 in.	12,20 in.	13,78 in.
C012	240 mm	310 mm	350 mm
	9,45 in.	12,20 in.	13,78 in.
C013	240 mm	360 mm	350 mm
	9,45 in.	14,17 in.	13,78 in.
C014	300 mm	360 mm	350 mm
	11,81 in.	14,17 in.	13,78 in.
C015	300 mm	360 mm	350 mm
	11,81 in.	14,17 in.	13,78 in.
C016	300 mm	360 mm	350 mm
	11,81 in.	14,17 in.	13,78 in.

REVERSIBLE AUTOPILOT POWER UNITS

• MOD. C01R - C04R

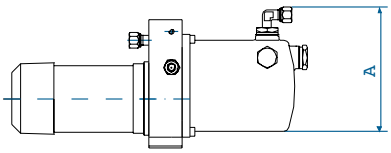

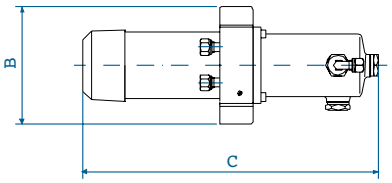

Four different models of reversible power units are available for autopilot application with steering cylinders having a volume up to 500cc. They have the same performances as the solenoid-valve units, ensuring a precise and reliable interface with the autopilot software, but with a lower electrical consumption. These are suggested for all applications where the power consumption is critical, and must be as low as possible.

The unit is composed basically of a reversible electric motor, a reversible hydraulic pump, an oil tank and a filter group. Their dimensions have been reduced, allowing installation in very narrow places.

For the selection of the optimum system, please determine the steering cylinder volume and then choose the suggested model in our Order Guide on the following page.

Features

- **Available in four models for steering cylinder volumes up to 500 cc**
- **Precise and reliable interface with the autopilot**
- **Compact design and reduced dimensions**
- **Very low electric consumption**

TECHNICAL SPECIFICATIONS AND APPLICATIONS

DIMENSIONS			
Model	**A**	**B**	**C**
CO1RU - CO1R	160 mm / 6,30 in.	155 mm / 6,10 in.	285 mm / 11,22 in.
CO2RU - CO2R	160 mm / 6,30 in.	155 mm / 6,10 in.	285 mm / 11,22 in.
CO3RU - CO3R	185 mm / 7,28 in.	155 mm / 6,10 in.	360 mm / 14,17 in.
CO4NRU - CO4NR	185 mm / 7,28 in.	155 mm / 6,10 in.	360 mm / 14,17 in.

ORDER GUIDE AND TECHNICAL DETAILS											
Model	Code	Typical cylinder application	Cylinder application	Application time in sec.	Displace-ment	Setting pressure	Max power consumption	Therm protection	Motor nominal power	Tank capacity	Weight*
CO1RU 12V CO1R 12V	IT21305 IT12519	70 - 100 cc	/	depending on the cylinder volume	360 cc/min	50 bar	7 A	10 A	80 W	0.55 lt	6.5 Kg
CO1RU 24V CO1R 24V	IT21306 IT11341	4.27 - 6.1 cu.in			21.97 cu.in	725 psi	4.5 A	10 A		33,56 in.cu	14,33 lb
CO2RU 12V CO2R 12V	IT21307 IT12535	115 - 130 cc	CTA40U - CTA40	14,5	480 cc/min	50 bar	8,5 A	10 A	80 W	0.55 lt	6.5 Kg
CO2RU 24V CO2R 24V	IT21308 IT12536	6.1 - 7.93 cu.in			29.30 cu.in	725 psi	4,5 A	10 A		33,56 in.cu	14,33 lb
CO3RU 12V CO3R 12V	IT21309 IT15710	130 - 360 cc	CTA40U - CTA40 CTA75U - CTA75 CTA80U - CTA80 CTB110U - CTB110 CTB130U - CTB130 CTB145U - CTB145	10,5 11,7 13,4 17,6 20,18 22,5	960 cc/min	50 bar	10 A	16 A	125 W	0.95 lt	8.5 Kg
CO3RU 24V CO3R 24V	IT21310 IT12550	7.93 - 13.42 cu.in			58.56 cu.in	725 psi	7 A	10 A		33,56 in.cu	18,73 lb
CO4NRU 12V CO4NR 12V	IT21311 IT15711	360 - 500 cc	CTC200 CT230	15,6 17,8	1920 cc/min	50 bar	22 A	25 A	150 W	0.95 lt	8.5 Kg
CO4NRU 24V CO4NR 24V	IT21312 IT15712	21.96 - 30,5 cu.in			117.12 cu.in	725 psi	11 A	16 A		33,56 in.cu	18,73 lb
CO3RAU 12V CO3RA 12V	IT23338 IT18044	130-360 cc	CTA65U CTA65 CTA75U CTA75 CTA80U CTA80 CTB110U CTB110	12,2 13,8 15,8 20,7	816 cc/min.	50 bar	11 A	16 A	125 W	7 lt	10 Kg-20,04 lb
CO3RAU 24V CO3RA 24V	IT12552 IT12551	7,93-21,96 cu.in.			49,77 cu.in.	725 psi	6 A	10 A		427 in.cu	10,5 Kg-23,14 lb
CO4RAU 12V CO4RAU 12V	IT23339 IT12569	360-500 cc	CTB130U CTB130 CTB145U CTB145 CTC200 CTC300	10 11,2 15,4 23,2	1940 cc/min.	50 bar	26 A	32 A	150 W	12 lt	15 Kg-33,06 lb
CO4RA 24V	IT12568	21,96-30,5 cu.in.			118,34 cu.in	725 psi	13 A	16 A		732 in.cu	15,5 Kg-34,16 lb

(*) Weight is intended without oil.

ORDER GUIDE AND TECHNICAL DETAILS											
Model	Code	Typical cylinder application	Cylinder application	Application time in sec.	Displacement	Setting pressure	Max power consumption	Therm protection	Motor nominal power	Tank capacity	Weight*
CO1NU 12V CO1N 12V CO1NU 24V CO1N 24V	IT21313 IT12517 IT21314 IT12518	70 - 100 cc 4.27 - 6.1 cu.in	/	depending on the cylinder volume	360 cc/min 21.97 cu.in/ min	50 bar 725 psi	7 A 4.5 A	10 A 10 A	60 W	0,55 lt 33,56in. cu	6.5 Kg 14.33 lb
CO2NU 12V CO2N 12V CO2NU 24V CO2NU 24V	IT21315 IT12532 IT21316 IT12533	115 - 130 cc 6.1 - 7.93 cu.in	CTA40U CTA40	14,5	480 cc/min 29.30 cu.in/ min	50 bar 725 psi	9.4 A 6 A	10 A 10 A	60 W	0,55 lt 33,56in. cu	6.5 Kg 14.33 lb
CO2/3NU 12V CO2/3N 12V CO2/3NU 24V CO2/3N 24V	IT21317 IT12521 IT21318 IT12522	130 - 220 cc 7.93 - 13.42 cu.in	CTA65U CTA65 CTA75U CTA75 CTA80U CTA80	14 15,6 17,9	720 cc/min 43.95 cu.in/ min	50 bar 725 psi	16 A 10 A	20 A 16 A	100 W	0,95 lt 57,97in. cu	8.5 Kg 18.73 lb
CO3NU 12V CO3N 12V CO3NU 24V CO3N 24V	IT21319 IT15314 IT21320 IT12549	220 - 360 cc 13.42 - 21.96 cu.in	CTB110U CTB110 CTB130U CTB130 CTB145U CTB145	13,8 15,8 17,7	1220 cc/min 74.48 cu.in/ min	50 bar 725 psi	18 A 12 A	20 A 16 A	100 W	0,95 lt 57,97in. cu	8.5 Kg 18.73 lb
CO4 12V CO4 24V	IT12559 IT11342	360 - 500 cc 21.96 - 30.5 cu.in	CTC200 CTC230	16 18	1860 cc/min 113.55 cu.in/ min	45 bar 652 psi	18 A 10 A	20 A 16 A	150 W	3,0 lt 183in.cu	14 Kg 30.86 lb
CO4/5 12V CO4/5 24V	IT12555 IT12556	500 - 570 cc 30.50 - 34.77 cu.in	CTC200 CTC230 CTC300	12,3 14 18,4	2440 cc/min 148.96 cu.in/ min	45 bar 652 psi	20 A 12 A	25 A 16 A	150 W	3,0 lt 183in.cu	14 Kg 30.86 lb
CO7 24V	IT12581	500 - 570 cc 30.50 - 34.77 cu.in	CTC300	21	2100 cc/min 128.20 cu.in/ min	55 bar 797 psi	/ 18 A	/ 20 A	300 W	12,0 lt 732in.cu	25 Kg 55.11 lb
CO8 24V	IT12582	570 - 750 cc 34.77 - 45.75 cu.in	CTC300	15,7	2850 cc/min 173.99 cu.in/ min	55 bar 797 psi	/ 21 A	/ 25 A	300 W	12,0 lt 732in.cu	25 Kg 55.11 lb
CO9 24V	IT12584	750 - 1000 cc 45.75 - 61.00 cu.in	CTC400 CTD310	16,6 14	3600 cc/min 219.78 cu.in/ min	55 bar 797 psi	/ 21 A	/ 25 A	550 W	25,0 lt 1525in. cu	40 Kg 88.18 lb
CO10 24V	IT12497	1000 - 1200 cc 61.00 - 73.3 cu.in	CTC400 CTD310	13 10,9	4650 cc/min 283.88 cu.in/ min	55 bar 797 psi	/ 30 A	/ 32 A	300 W	12,0 lt 732in.cu	40 Kg 88.18 lb
CO11 24V	IT12499	1200 - 1250 cc 73,28 - 76,27 cu.in	CTD450	16,3	4650 cc/min 283.88 cu.in/ min	55 bar 797 psi	/ 35 A	/ 40 A	550 W	25,0 lt 1525in. cu	40 Kg 88.18 lb
CO12 24V	IT12500	1250 - 1350 cc 76,27 - 82,38 cu.in.	CTE600	14,6	5400 cc/min 329.4 cu.in/ min	55 bar 797 psi	/ 35 A	/ 40 A	550 W	25,0 lt 1525in. cu	40 Kg 88,18 lb
CO13 24V	IT12502	1350 - 1750 cc 82,38 - 106,79 cu.in.	CTE600	11	7200 cc/min 439.2 cu.in/ min	55 bar 797 psi	/ 40 A	/ 50 A	550 W	32,0 lt 1952in. cu	43 Kg 94,80 lb
CO14 24V	IT12503	1250 - 1350 cc 76,27 - 84,38 cu.in.	CTE600	12,5	6300 cc/min 384.3 cu.in/ min	55 bar 797 psi	/ 55 A	/ 63 A	1100 W	32,0 lt 1952in. cu	43 Kg 94,80 lb
CO15 24V	IT12504	1750 - 2000 cc 106,79 - 122 cu.in.	CTE900	13	9150 cc/min 558.15 cu.in/ min	55 bar 797 psi	/ 55 A	/ 63 A	1100 W	32,0 lt 1952in. cu	43 Kg 94,80 lb
CO16 24V	IT12507	2000 - 3900 cc 122 - 238 cu.in	CTE1200 CTF1600	13,3 19,5	11850 cc/min 722.85 cu.in/ min	55 bar 797 psi	/ 65 A	/ 80 A	1100 W	32,0 lt 1952in. cu	43 Kg 94,80 lb

(*) Weight is intended without oil.

POWER-ASSISTED INBOARD STEERING SYSTEMS

The Twin Disc Power Assisted Steering system is the combination of innovation, reliability and comfort. The system provides prompt responsivity and total control with just 3.5 wheel turns lock-to-lock, even at high speeds (over 28 Knots). The compact design and reduced number of components (3 vs 6-7 in other brands) allows the system to be easy to install and service.

Twin Disc power-assisted steering assures maximum comfort, minimum effort, total efficiency in any sea condition.

The System
The hydraulic helm pump is available in all displacements and mounting configurations (see help pump on page 9 for the model selection). Simple design with reduced dimensions for the steering cylinder, which are available either in anodized aluminum body (for applications up to 45'), or in a brass body for heavier applications, has the servo cylinder mounted directly to the main cylinder.

The Twin Disc power-assisted steering is completely independent from the vessel's main engines and all necessary power is provided by a single electrohydraulic power unit.

The system has all the necessary valves for the servo system in order to ensure safe steering (non-return valves, relief valves, etc.). It also includes an interface for the autopilot and a special device for the system automatic filling.

In order to ensure safety and total boat control in emergency conditions, the Twin Disc steering system automatically turns into a manual system if there is any problem with the unit.

Features

- Totally independent from the vessel propulsion system
- Effortless navigation comfort in any condition
- High quality, safety and reliability
- Innovative concept and working principle
- 3 elements of the basic system vs. 6-7 elements in other brands
- Strong reduction of installation time (over 30% in comparison with competitors steering)
- Prompt responsiveness and total control in just 3.5 turns lock-to-lock (this number can be varied)
- Cooling system is not necessary
- Supplied with interface for the autopilot
- Special device for automatic filling of the system
- Bleeding procedure easy and fast
- Steering helm pump available in 5 displacements and 4 mounting configurations
- Provided with automatic manual back-up steering
- Simplified service and repair procedures (the system is not pressurized)
- Limited number of spare parts
- Helm pumps and cylinders meet ABYC standards and are CE approved
- Helm pumps are NMMA Type Approved

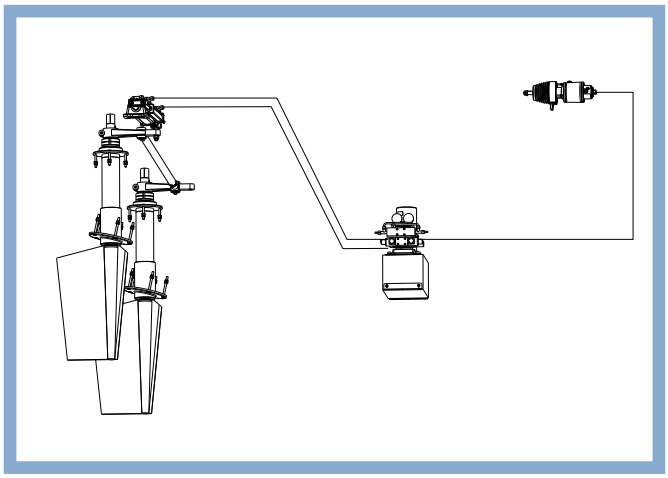

WORKING PRINCIPLE

The power-assisted steering is totally independent; the electro-hydraulic power unit provides all the necessary power.

The steering system consists of an axial piston helm pump and a power assisted cylinder, which has the servo cylinder mounted on its body.

1. By turning the steering wheel, an oil flow is sent from the helm pump to the small servo cylinder mounted on the main one.

2. This flow enters the cylinder and makes the piston move. The pressure resulting from this movement is used to open a distributor placed on the electro-hydraulic power unit.

3. As the distributor opens, an oil flow reaches the main cylinder moving the piston as well as the rod connected to the tiller arm. This causes the rudder to rotate.

4. Oil displaced from the opposite side of the main cylinder flows back to the helm pump.

5. To rotate the rudder in the opposite direction, simply turn the helm pump the other way.

In case of electrical failure (i.e. the power unit cannot be turned on or is out of order), by turning the helm pump oil flows automatically into the main cylinder which then allows the rudder to rotate.

The power-assisted steering automatically becomes a manual hydraulic back-up system with no need for switching anything or open/close any bypass.

CYLINDERS

The power-assisted steering cylinders are available with anodized aluminum body (for applications up to 45'), or with a brass body (for applications over 45').

The small servo cylinder is mounted directly to the main cylinder. This results in an extremely simple design with reduced dimensions for an easy installation in very narrow spaces.

The piston rod is made of stainless steel for both the servo and main cylinders allowing longer life and higher resistance to rust and corrosion.

The standard dimensions of ball joints can be easily ordered and can be supplied in stainless steel upon request.

The cylinder base can be adjusted either horizontally, to follow the complete arc of the cylinder, or vertically, in order to adapt to any tiller extension.

Every cylinder is supplied with Tee fittings with bleeders as well as the necessary fittings for hose connection.

All cylinders are built with materials suitable for application in the marine environment, where there is a high level of salinity.

In case of particularly difficult environmental conditions, stainless steel ball joints and fittings are recommended.

Main Features

- Compact design with reduced dimensions
- Servo cylinder integrally fixed to the main one
- Available in a wide variety of volumes and strokes for application flexibility
- Provided with bleeders
- Available with anodized aluminum or bronze body
- Piston rod in stainless steel
- Cylinder base twisting either horizontally or vertically
- High resistance to corrosion
- Meet ABYC standards
- CE marked

POWER-ASSISTED INBOARD STEERING CYLINDERS

• SERIES CTA_AU

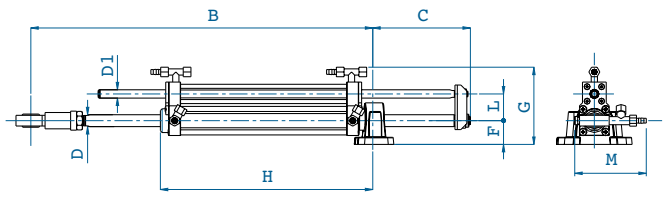

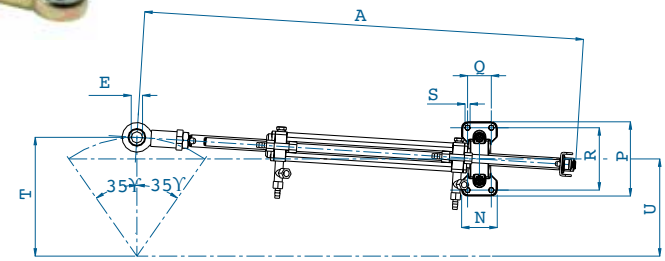

Power-assisted steering cylinders are available either with an anodized aluminum body (for applications up to 45'), or with a brass body, for applications over 45'. The small servo-cylinder is mounted directly to the main cylinder. This results in an extremely simple design with reduced dimensions for easy installation in very narrow spaces.

The piston rod is made of stainless steel in both servo and main cylinders for longer life and a higher resistance to rust and corrosion. Ball joints are available in the most popular sizes for the market and can be supplied in stainless steel upon request. The cylinder base can adjust either horizontally, to follow the complete arc of the cylinder, or vertically, in order to adapt to any tiller extension.

Every cylinder is supplied with Tee fittings with bleeders as well as the necessary fittings for hose connection. All cylinders are built with materials suitable for application in marine environment, even high salt conditions. In case of difficult environment conditions, it is suggested to request the stainless steel versions of ball joint and fittings.

Main Features

- Cylinder body in anodized aluminum
- Piston rod in stainless steel for a high corrosion resistance
- Adjustable base either horizontally or vertically
- Supplied with bleeders
- Meets ABYC standards

TECHNICAL SPECIFICATIONS

DIMENSIONS																			
Model	Stroke	A	B	C	D	D1	E	F	G	H	L	M	N	P	Q	R	S	T	U
CTA80AU CTA80A	228 mm	741 mm	578 mm	162 mm	20 mm	14 mm	19,05 mm	40 mm	130 mm	360 mm	45 mm	120 mm	60 mm	125 mm	40 mm	105 mm	8,5 mm	200 mm	165 mm
	9,0 in.	29,17 in.	22,77 in.	6,38 in.	0,79 in.	0,55 in.	3/4 in.	1,57 in.	5,11 in.	13,17 in.	1,77 in.	4,72 in.	2,36 in.	4,92 in.	1,57 in.	4,13 in.	0.33 in.	7,87 in.	6,5 in.

TECHNICAL DETAILS									
Model	Code	Stroke	Rudder Torque	Thrust at 70 bar - 1000 psi	Volume	Tiller	Angle	Fittings	Weight
CTA80AU CTA80A	IT12681 IT12680	228 mm	107.33 Kgm	659,4 Kgf	214.78 cc	200 mm	35° + 35°	1/4"NPT - 3/8" O.D.	5,5 Kg
		9.0 in	9297 in/lb	1453 lbf	13.11 cu.in	7,8 in.			12,13 lb

NOTE: The power-assisted inboard steering cylinders type CTA_A are not suitable for installations on racing boats.

POWER-ASSISTED INBOARD STEERING CYLINDERS

• SERIES CTB_AU

Features

- Cylinder body in brass
- Piston rod in stainless steel for a high corrosion resistance
- Adjustable base either horizontally or vertically
- Available in a range of volumes between 280 cc and 360 cc
- Supplied with bleeders
- Meets ABYC standards

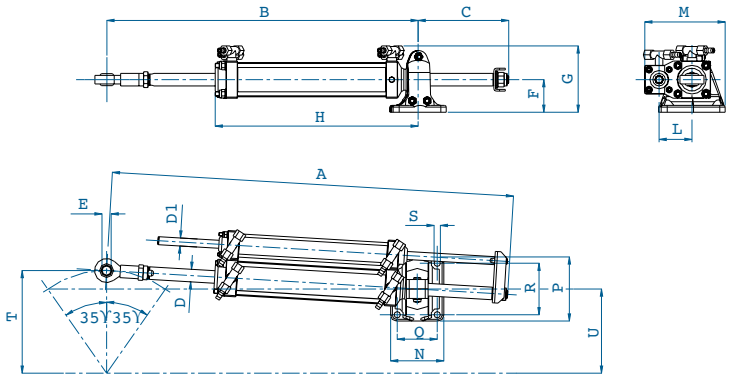

TECHNICAL SPECIFICATIONS

DIMENSIONS																			
Model	Stroke	A	B	C	D	D1	E	F	G	H	L	M	N	P	Q	R	S	T	U
CTB110AU	178 mm	666 mm	521 mm	146 mm	22 mm	14 mm	19,05 mm	57 mm	116 mm	329 mm	58 mm	140 mm	93 mm	112 mm	70 mm	90 mm	11 mm	153 mm	127 mm
CTB110A	7.0 in.	26,22 in.	20,51 in.	5.75 in.	0.87 in.	0.55 in.	3/4 in.	2.24 in.	4.56 in.	12.95 in.	2.28 in.	5.51 in.	3.66 in.	4.4 in.	2.75 in.	3.54 in.	0.43 in.	6.0 in.	5,0 in.
CTB130AU	204 mm	703 mm	545 mm	159 mm	22 mm	14 mm	16 mm	57 mm	116 mm	355 mm	58 mm	140 mm	93 mm	112 mm	70 mm	90 mm	11 mm	180 mm	147 mm
CTB130A	8.0 in.	27,68 in.	21.46 in.	6,26 in.	0.87 in.	0.55 in.	0,63 in.	2.24 in.	4.56 in.	13.98 in.	2.28 in.	5.51 in.	3.66 in.	4.4 in.	2.75 in.	3.54 in.	0.43 in.	7.08 in.	5,78 in.
CTB145AU	228 mm	766 mm	596 mm	171 mm	22 mm	14 mm	19,05 mm	57 mm	116 mm	379 mm	58 mm	140 mm	93 mm	112 mm	70 mm	90 mm	11 mm	200 mm	164 mm
CTB145A	9.0 in.	30,16 in.	23.46 in.	6.73 in.	0.87 in.	0.55 in.	3/4 in.	2.24 in.	4.56 in.	14.92 in.	2.28 in.	5.51 in.	3.66 in.	4.4 in.	2.75 in.	3.54 in.	0.43 in.	7.87 in.	6,5 in.

TECHNICAL DETAILS									
Model	Code	Stroke	Rudder Torque	Thrust at 70 bar - 1000 psi	Volume	Tiller	Angle	Fittings	Weight
CTB110AU	IT12686	178 mm	140.85 Kgm	1108 Kgf	281,77 cc	153 mm	35°+35°	1/4"NPT - 3/8" O.D.	11,9 Kg
CTB110A	IT12684	7.0 in.	12197 in/lb	2442 lbf	17.19 cu.in	6.0 in.			26,2 lb
CTB130AU	IT12690	204 mm	161,42 Kgm	1108 Kgf	322,93 cc	180 mm	35°+35°	1/4"NPT - 3/8" O.D.	12,3 Kg
CTB130A	IT12688	8.0 in.	13978 in/lb	2442 lbf	19,71 cu.in	7.0 in.			27,2 lb
CTB145AU	IT15883	228 mm	180.41 Kgm	1108 Kgf	360,92 cc	200 mm	35°+35°	1/4"NPT - 3/8" O.D.	13,1 Kg
CTB145A	IT12693	9.0 in.	15623 in/lb	2442 lbf	22,0 cu.in	7.87 in.			28,85 lb

NOTE: The power-assisted inboard steering cylinders type CTB_A are not suitable for installations on racing boats.

POWER-ASSISTED INBOARD STEERING CYLINDERS

• SERIES CTC_AU

Features

- Piston rod in stainless steel for a high corrosion resistance
- Adjustable base either horizontally or vertically
- Available in a range of volumes between 500 cc and 1000 cc
- Supplied with bleeders
- Meets ABYC standards

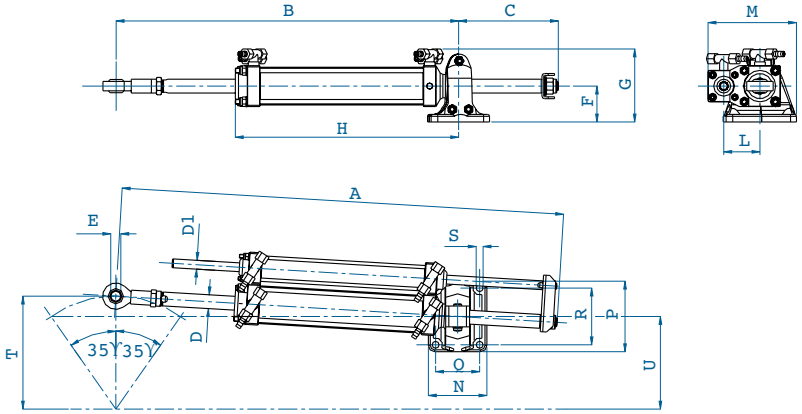

TECHNICAL SPECIFICATIONS

DIMENSIONS																			
Model	Stroke	A	B	C	D	D1	E	F	G	H	L	M	N	P	Q	R	S	T	U
CTC200AU	200 mm	767 mm	607 mm	161 mm	28 mm	14 mm	25 mm	55 mm	132,5 mm	385 mm	65 mm	162 mm	100 mm	140 mm	72 mm	112 mm	11 mm	175 mm	143 mm
CTC200A	7.87 in.	30.2 in.	23.9 in.	6.34 in.	1,10 in.	0,55 in.	0,98 in.	2,17 in.	5,22 in.	15,16 in.	2,56 in.	6,38 in.	3,94 in.	5,51 in.	2,83 in.	4,41 in.	0,43 in.	6,89 in.	5,6 in.
CTC230AU	228 mm	823 mm	649 mm	175 mm	28 mm	14 mm	25 mm	55 mm	132,5 mm	413 mm	65 mm	162 mm	100 mm	140 mm	72 mm	112 mm	11 mm	200 mm	164 mm
CTC230A	9.0 in.	32.4 in.	25.55 in.	6.89 in.	1,10 in.	0,55 in.	0,98 in.	2,17 in.	5,22 in.	16,26 in.	2,56 in.	6,38 in.	3,94 in.	5,51 in.	2,83 in.	4,41 in.	0,43 in.	7,87 in.	6,5 in.
CTC300AU	300 mm	967 mm	757 mm	211 mm	28 mm	14 mm	25 mm	55 mm	132,5 mm	485 mm	65 mm	162 mm	100 mm	140 mm	72 mm	112 mm	11 mm	260 mm	215 mm
CTC300A	11,81 in.	38 in.	29.8 in.	8.3 in.	1,10 in.	0,55 in.	0,98 in.	2,17 in.	5,22 in.	19,09 in.	2,56 in.	6,38 in.	3,94 in.	5,51 in.	2,83 in.	4,41 in.	0,43 in.	10,24 in.	8,5 in.
CTC400AU	400 mm	1167 mm	907 mm	261 mm	28 mm	14 mm	25 mm	55 mm	132,5 mm	585 mm	65 mm	162 mm	100 mm	140 mm	72 mm	112 mm	11 mm	350 mm	286 mm
CTC400A	15.75 in.	46 in.	35.7 in.	10.27 in.	1,10 in.	0,55 in.	0,98 in.	2,17 in.	5,22 in.	23,0 in.	2,56 in.	6,38 in.	3,94 in.	5,51 in.	2,83 in.	4,41 in.	0,43 in.	13,78 in.	11,3 in.

TECHNICAL DETAILS									
Model	Code	Stroke	Rudder Torque	Thrust at 70 bar - 1000 psi	Volume	Tiller	Angle	Fittings	Weight
CTC200AU	IT15885	200 mm	249,93 Kgm	1750 Kgf	500,0 cc	175 mm	35° +35°	1/4"NPTF - 3/8" D.E. for Servo-control cylinder 1/4"NPTF - 1/2" D.E. for main cylinder G1/4 - hose d. 10 e T - G1/2 - hose d.10	16,8 Kg
CTC200A	IT12696	7,87 in.	21643 in/lb	3857 lbf	30.5 cu.in	6.9 in.			37,1 lb
CTC230AU	IT15887	228 mm	284,92 Kgm	1750 Kgf	570,0 cc	200 mm	35° +35°	1/4"NPTF - 3/8" D.E. for Servo-control cylinder 1/4"NPTF - 1/2" D.E. for main cylinder G1/4 - hose d. 10 e T - G1/2 - hose d.10	19,2 Kg
CTC230A	IT12699	9.0 in.	24674 in/lb	3857 lbf	34,78 cu.in	7.87 in.			42,3 lb
CTC300AU	IT15889	300 mm	374.89 Kgm	1750 Kgf	750,0 cc	260 mm	35° +35°	1/4"NPTF - 3/8" D.E. for Servo-control cylinder 1/4"NPTF - 1/2" D.E. for main cylinder G1/4 - hose d. 10 e T - G1/2 - hose d.10	21,8 Kg
CTC300A	IT15715	11.81 in.	32465 in/lb	3857 lbf	45.77 cu.in	10.2 in.			48,1 lb.
CTC400AU	IT16136	400 mm	499.85 Kgm	1750 Kgf	1000,0 cc	350 mm	35° +35°	1/4"NPTF - 3/8" D.E. for Servo-control cylinder 1/4"NPTF - 1/2" D.E. for main cylinder G1/4 - hose d. 10 e T - G1/2 - hose d.10	26,8 Kg
CTC400A	IT12702	15.75 in.	43287 in/lb	3857 lbf	61,02 cu.in	13.7 in.			59 lb

NOTE: The cylinders type CTC_A are not suitable for installations on racing boats.

POWER-ASSISTED ELECTRO-HYDRAULIC POWER UNIT

• MOD. C0500

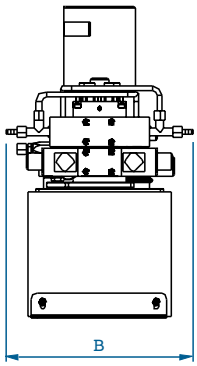

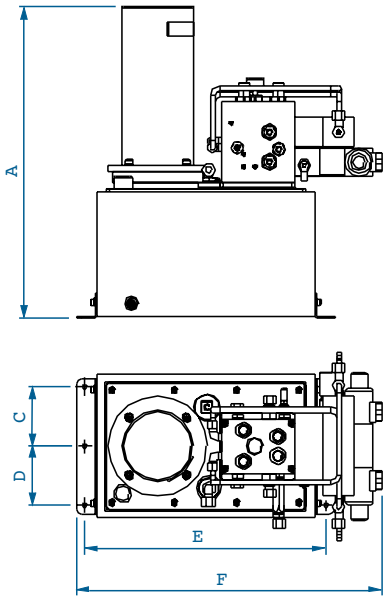

TECHNICAL SPECIFICATIONS

DIMENSIONS						
Model	A	B	C	D	E	F
C0500/3/0,5U C0500/3/0,5	510 mm	300 mm	95 mm	95 mm	387 mm	505 mm
	20 in.	11,81 in.	3,74 in.	3,74 in.	15,24 in.	19,88 in.
C0500/4/0,75U C0500/4/0,75	510 mm	300 mm	95 mm	95 mm	387 mm	505 mm
	20 in.	11,81 in.	3,74 in.	3,74 in.	15,24 in.	19,88 in.
C0500/6/0,75U C0500/6/0,75	540 mm	300 mm	95 mm	95 mm	387 mm	505 mm
	21,2 in.	11,81 in.	3,74 in.	3,74 in.	15,24 in.	19,88 in.

APPLICATION AND TECHNICAL DETAILS										
Model	Code	Cylinder application	Delivery in Servo-control system	Delivery with autopilot	Setting pressure	Max. power consumption	Thermal protection	Motor nominal power	Tank capacity	Weight*
C0500/3/0,5U 12V C0500/3/0,5 12V	IT16132 IT12571	CTA80AU CTA80A	3300 cc/min	675 cc/min	70 bar	43 A	50 A	600 W	12 lt	40 Kg
C0500/3/0,5U 24V C0500/3/0,5 24V	IT12572 IT15654	CTB110AU CTB110A CTB130AU CTB130A	201,5 cu.in/min	41,2 cu.in/min	1015 psi	23 A	25 A	500 W	732 cu.in	88 lb
C0500/4/0,75U 24V	IT16133	CTB145AU	3900 cc/min	855 cc/min	70 bar	27 A	32 A	500 W	12 lt	40 Kg
C0500/4/0,75 24V	IT12573	CTB145A	238,0 cu.in/min	52,2 cu.in/min	1015 psi				732 cu.in	88 lb
C0500/6/0,75U 24V	IT16134	CTC200AU CTC200A	6450 cc/min	1260 cc/min	70 bar	41 A	40 A	800 W	12 lt	40 Kg
C0500/6/0,75 24V	IT12574	CTC230AU CTC230A CTC300AU CTC300A CTC400AU CTC400A	394,0 cu.in/min	77,0 cu.in/min	1015 psi				732 cu.in	88 lb

(*) Weight is intended without oil.

POWER-ASSISTED STEERING SYSTEM APPLICATIONS ACCORDING TO THE BOAT LENGTH

Boat Length LOA	System to Order		
	Planing Hull	Semi Displacement Hull	
		Pleasure	Working
12 - 13,7 mt / 40 - 45 ft	15	17	18
13,7 - 15,3 mt / 45 - 50 ft	16	18	19
15,3 - 16,8 mt / 50 - 55 ft	17	19	20
16,8 - 18 mt / 55 - 60 ft	18	20	21
18 - 19,8 mt / 60 - 65 ft	19	21	22
19,8 - 21 mt / 65 - 70 ft	20	22	/
21 - 22,9 mt / 70 - 75 ft	21	22	/
22,9 - 24,4 mt / 75 - 80 ft	22	/	/
24,3 - 26 mt / 80 - 85 ft	22	/	/

WARNING! The above suggestions shall be intended as indicative. To check the proper application the required max torque must be calculated. If the required information is not available please contact our authorized dealer or service center and submit boat length, maximum speed and rudder dimensions. For planing boats, the above steering systems are suggested for boat speeds between 30 and 45 knots and for semi displacement boat with hull speed between 15 and 20 knots.

Power-Assisted Steering System									
System to Order	Cylinder	Code	Pump	Wheel Turns Lock-to-Lock (MANUAL)	Wheel Turns Lock-to-Lock (Servo-Assisted)	Power Unit	Code	Hydraulic Scheme	
								Main Station	Second station
System 15	CTA80AU CTA80A	IT12681 IT12680	20 cc/rev	10.7	4	C0500/3/0,5U 24Vdc C0500/3/0,5 12Vdc	IT16132 IT12571	SI-600/B	SI-610/B
System 16	CTB110AU CTB110A	IT12686 IT12684	30 cc/rev	9.4	3.8			SI-601/B	SI-611/B
System 17	CTB130AU CTB130A	IT12690 IT12688	30 cc/rev	10.7	4.4	C0500/3/0,5U 24Vdc C0500/3/0,5 24Vdc	IT12572 IT15654	SI-602/B	SI-612/B
			42 cc/rev	7.7	3.1			SI-602/C	SI-612/C
System 18	CTB145AU CTB145A	IT15883 IT12693	30 cc/rev	12	4.9	C0500/4/0,75U 24Vdc C0500/4/0,75 24Vdc	IT16133 IT12573	SI-603/B	SI-613/B
			42 cc/rev	8.6	3.5			SI-603/C	SI-613/C
System 19	CTC200AU CTC200A	IT15885 IT12696	30 cc/rev	16.6	4.3	C0500/6/0,75U 24Vdc C0500/6/0,75 24/vdc	IT16134 IT12574	SI-604/B	SI-614/B
			42 cc/rev	11.9	3			SI-604/C	SI-614/C
System 20	CTC230AU CTC230A	IT15887 IT12699	30 cc/rev	19	4.9			SI-605/B	SI-615/B
			42 cc/rev	13.6	3.5			SI-605/C	SI-615C
System 21	CTC300AU CTC300A	IT15889 IT15715	42 cc/rev	17.8	4.6			SI-606/A	SI-616/A
System 22	CTC400AU CTC400A	IT16136 IT12702	42 cc/rev	24	6.1			SI-606/C	SI-616/C

SYSTEM 15

Components	Model	Code	Qty.
Cylinder	CTA80AU CTA80A	IT12681 IT12680	1
Helm pump	P20BAP P20BA	IT21173 IT16192	1
Fittings for single station		IT12784 IT13685	2
Electrohydraulic power unit	C0500/3/0,5U 12 Vdc C0500/3/0,5U 24 Vdc C0500/3/0,5 12 Vdc C0500/3/0,5 24 Vdc	IT16132 IT12571 IT12572 IT15654	1
Hydraulic oil	VG22	IT21334	3
In case of a second station please add:			
2° station helm pump	P20BAP P20BA	IT21173 IT16192	1
Fittings kit for additional station		IT23376 IT23942	1
Hydraulic oil	VG22	IT21334	1

SYSTEM 16

Components	Model	Code	Qty.
Cylinder	CTB110AU CTB110A	IT12686 IT12684	1
Helm pump	P30BAP P30BA	IT21174 IT16193	1
Fittings for single station		IT12784 IT13685	2
Electrohydraulic power unit	C0500/3/0,5U 12 Vdc C0500/3/0,5 24 Vdc C0500/3/0,5U 24 Vdc C0500/3/0,5 24 Vdc	IT16132 IT12571 IT12572 IT15654	1
Hydraulic oil	VG22	IT21334	3
In case of a second station please add:			
2° station helm pump	P30BAP P30BA	IT21174 IT16193	1
Fittings kit for additional station		IT23376 IT23942	1
Hydraulic oil	VG22	IT21334	1

PUMP-CYLINDER COMBINATION

Choose combination between pump and cylinder according to the desired number of wheel turns lock-to-lock. Note: the requested effort on the steering wheel is inversely proportional to the wheel turns number lock-to-lock: • less wheel turns, more effort • more wheel turns, less effort	HELM PUMP		
	 (*) P20BAP Cod. IT21173 P20BA Cod. IT16192	 (*) P30BAP Cod. IT21174 P30BA Cod. IT16193	 (*) P42BAP Cod. IT21175 P42BA Cod. IT16194
 CTA80AU - Cod. / Part # 12681 CTA80A - Cod. / Part # 12680	# of wheel turns Manual: 10,7 Servo-control system: 4,0 Suggested min hose (**) Tiller: 200 mm / 7.8 in. Angle: 35 + 35 Torque: 107,36 Kgm / 92,97 lb.in. Min. wheel diam.: 350 mm - 13,77 in.		
 CTB110AU - Cod. / Part # 12686 CTB110A - Cod. / Part # 12684		# of wheel turns Manual: 9,4 Servo-control system: 3,8 Suggested min hose (**) Tiller: 153 mm / 6.0 in. Angle: 35 + 35 Torque: 140.85 Kgm / 121,97 lb.in. Min. wheel diam.: 350 mm - 13,77 in.	No. of wheel turns: 20,2 Copper tube d.e. 18x1,5 mm Tiller: 350 mm / 13,78 in. Angle: 35° + 35° Torque: 1928 Kgm / 167640 lb.in. Min. wheel diam.: 1000 mm - 39,37 in.

(*) For more details, see the basic helm section starting on page 9 to choose the desired mounting configuration.
(**) For the choice of the hydraulic hose, please see the relative scheme.

SYSTEM 17

Components	Model	Code	Qty.
Cylinder	CTB130AU CTB130A	IT12690 IT12688	1
Helm pump	P30BAP P30BA P42BAP P42BA	IT21174 IT16193 IT21175 IT16194	1 1
Fittings for single station		IT12784 IT13685	2 1
Electrohydraulic power unit	CO500/3/0,5U 12 Vdc CO500/3/0,5 12 Vdc CO500/3/0,5U 24 Vdc CO500/3/0,5 24 Vdc	IT16132 IT12572	1
Hydraulic oil	VG22	IT21334	3
In case of a second station please add:			
2° station helm pump	P30BAP P30BA P42BAP P42BA	IT21174 IT16193 IT21175 IT16194	1 1
Fittings kit for additional station		IT23376 IT23942	1
Hydraulic oil	VG22	IT21334	1

SYSTEM 18

Components	Model	Code	Qty.
Cylinder	CTB145AU CTB145A	IT15883 IT12693	1
Helm pump	P30BAP P30BA P42BAP P42BAP	IT21174 IT16193 IT21175 IT16194	1 1
Fittings for single station		IT12784 IT13685	2 1
Electrohydraulic power unit	CO500/4/0,75U 24 Vdc CO500/4/0,75 24 Vdc	IT16133 IT12573	1
Hydraulic oil	VG22	IT21334	3
In case of a second station please add:			
2° station helm pump	P30BAP P30BA P42BAP P42BA	IT21174 IT16193 IT21175 IT16194	1 1
Fittings kit for additional station		IT23376 IT23942	1
Hydraulic oil	VG22	IT21334	1

PUMP-CYLINDER COMBINATION

Choose combination between pump and cylinder according to the desired number of wheel turns lock-to-lock. Note: the requested effort on the steering wheel is inversely proportional to the wheel turns number lock-to-lock: • less wheel turns, more effort • more wheel turns, less effort	HELM PUMP		
	 (*) P20BAP Cod. IT21173 P20BA Cod. IT16192	 (*) P30BAP Cod. IT21174 P30BA Cod. IT16193	 (*) P42BAP Cod. IT21175 P42BA Cod. IT16194
 CTB130AU - Cod. / Part # 12690 CTB130A - Cod. / Part # 12688		# of wheel turns Manual: 10,7 Servo-control system: 4,4 Suggested min hose (**) Tiller: 180 mm / 7.0 in. Angle: 35 + 35 Torque: 161,42 Kgm / 13978 lb.in. Min. wheel diam.: 350 mm - 13,77 in.	# of wheel turns Manual: 7,7 Servo-control system: 3,2 Suggested min hose (**) Tiller: 180 mm / 7.0 in. Angle: 35 + 35 Torque: 161,42 Kgm / 13978 lb.in. Min. wheel diam.: 450 mm - 17,71 in.
 CTB145AU - Cod. / Part # 15883 CTB145A - Cod. / Part # 12693		# of wheel turns Manual: 12 Servo-control system: 4,9 Suggested min hose (**) Tiller: 200 mm / 7.8 in. Angle: 35 + 35 Torque: 180,41 Kgm / 15623 lb.in. Min. wheel diam.: 350 mm - 13,77 in.	# of wheel turns Manual: 8,6 Servo-control system: 3,5 Suggested min hose (**) Tiller: 200 mm / 7.8 in. Angle: 35 + 35 Torque: 180,41 Kgm / 15623 lb.in. Min. wheel diam.: 450 mm - 17,71 in.

(*) For more details, see the basic helm section starting on page 9 to choose the desired mounting configuration.
(**) For the choice of the hydraulic hose, please see the relative scheme.

SYSTEM 19

Components	Model	Code	Qty.
Cylinder	CTC200AU CTC200A	IT15885 IT12696	1
Helm pump	P30BAP P30BA P42BAP P42BA	IT21174 IT16193 IT21175 IT16194	1 1
Fittings for single station		IT12784 IT13685	2
Electrohydraulic power unit	CO500/6/0,75U 24 Vdc CO500/6/0,75 24 Vdc	IT16134 IT12574	1
Hydraulic oil	VG22	IT21334	3
In case of a second station please add:			
2° station helm pump	P30BAP P30BA P42BAP P42BA	IT21174 IT21175	1 1
Fittings kit for additional station		IT23376 IT23942	1
Hydraulic oil	VG22	IT21334	1

SYSTEM 20

Components	Model	Code	Qty.
Cylinder	CTC230AU CTC230A	IT15887 IT12699	1
Helm pump	P30BAP P30BA P42BAP P42BA	IT21174 IT16193 IT21175 IT16194	1 1
Fittings for single station		IT12784 IT13685	2
Electrohydraulic power unit	CO500/6/0,75U 24 Vdc CO500/6/0,75 24 Vdc	IT16134 IT12574	1
Hydraulic oil	VG22	IT21334	3
In case of a second station please add:			
2° station helm pump	P30BAP P30BA P42BAP P42BA	IT21174 IT16193 IT21175 IT16194	1 1
Fittings kit for additional station		IT23376 IT23942	1
Hydraulic oil	VG22	IT21334	1

PUMP-CYLINDER COMBINATION

Choose combination between pump and cylinder according to the desired number of wheel turns lock-to-lock.
Note: the requested effort on the steering wheel is inversely proportional to the wheel turns number lock-to-lock:
- less wheel turns, more effort
- more wheel turns, less effort

	HELM PUMP		
	 (*) P20BAP Cod. IT21173 P20BA Cod. IT16192	 (*) P30BAP Cod. IT21174 P30BA Cod. IT16193	 (*) P42BAP Cod. IT21175 P42BA Cod. IT16194
 CTC200AU - Cod. / Part # 15885 CTC200A - Cod. / Part # 12696		# of wheel turns Manual: 16,6 Servo-control system: 4,3 Suggested min hose (**) Tiller: 175 mm / 6.9 in. Angle: 35 + 35 Torque: 249,93 Kgm / 21643 lb.in. Min. wheel diam.: 350 mm - 13,77 in.	# of wheel turns Manual: 11,9 Servo-control system: 3,1 Suggested min hose (**) Tiller: 175 mm / 6.9 in. Angle: 35 + 35 Torque: 249,93 Kgm / 21643 lb.in. Min. wheel diam.: 450 mm - 17,71 in.
 CTC230AU - Cod. / Part # 15887 CTC230A - Cod. / Part # 12699		# of wheel turns Manual: 12 Servo-control system: 4,9 Suggested min hose (**) Tiller: 200 mm / 7.8 in. Angle: 35 + 35 Torque: 180,41 Kgm / 15623 lb.in. Min. wheel diam.: 350 mm - 13,77 in.	# of wheel turns Manual: 13,6 Servo-control system: 3,5 Suggested min hose (**) Tiller: 200 mm / 7.8 in. Angle: 35 + 35 Torque: 284,92 Kgm / 24674 lb.in. Min. wheel diam.: 450 mm - 17,71 in.

(*) For more details, see the basic helm section starting on page 9 to choose the desired mounting configuration.
(**) For the choice of the hydraulic hose, please see the relative scheme.

SYSTEM 21

Components	Model	Code	Qty.
Cylinder	CTC300AU CTC300A	IT15889 IT15715	1
Helm pump	P42BAP P42BA	IT21175 IT16194	1
Fittings for single station		IT12784 IT13685	2 1
Electrohydraulic power unit	CO500/6/0,75U 24 Vdc CO500/6/0,75 24 Vdc	IT16134 IT12574	1
Hydraulic oil	VG22	IT21334	3
In case of a second station please add:			
2° station helm pump	P42BAP P42BA	IT21175 IT16194	1
Fittings kit for additional station		IT23944 IT23943	1
Hydraulic oil	VG22	IT21334	1

SYSTEM 22

Components	Model	Code	Qty.
Cylinder	CTC400AU CTC400A	IT16136 IT12702	1
Helm pump	P42BAP P42BA	IT21175 IT16194	1
Fittings for single station		IT12784 IT13685	2
Electrohydraulic power unit	CO500/6/0,75U 24 Vdc CO500/6/0,75 24 Vdc	IT16134 IT12574	1
Hydraulic oil	VG22	IT21334	3
In case of a second station please add:			
2° station helm pump	P42BAP P42BA	IT21175 IT16194	1
Fittings kit for additional station		IT23944 IT23943	1
Hydraulic oil	VG22	IT21334	1

PUMP-CYLINDER COMBINATION

Choose combination between pump and cylinder according to the desired number of wheel turns lock-to-lock.
Note: the requested effort on the steering wheel is inversely proportional to the wheel turns number lock-to-lock:
- less wheel turns, more effort
- more wheel turns, less effort

	HELM PUMP		
	 (*) P20BAP Cod. IT21173 P20BA Cod. IT16192	 (*) P30BAP Cod. IT21174 P30BA Cod. IT16193	 (*) P42BAP Cod. IT21175 P42BA Cod. IT16194
 CTC300AU - Cod. / Part # 15889 CTC300A - Cod. / Part # 15715			# of wheel turns Manual: 17,8 Servo-control system: 4,6 Suggested min hose (**) Tiller: 260 mm / 10,2 in. Angle: 35 + 35 Torque: 374,89 Kgm / 32465 lb.in. Min. wheel diam.: 450 mm - 17,71 in.
 CTC400AU - Cod. / Part # 16136 CTC400A - Cod. / Part # 12702			# of wheel turns Manual: 24,0 Servo-control system: 6,1 Suggested min hose (**) Tiller: 350 mm / 13,7 in. Angle: 35 + 35 Torque: 499,85 Kgm / 43287 lb.in. Min. wheel diam.: 450 mm - 17,71 in.

(*) For more details, see the basic helm section starting on page 9 to choose the desired mounting configuration.
(**) For the choice of the hydraulic hose, please see the relative scheme.

POWER-ASSISTED STEERING SYSTEM: BIG RANGE

Twin Disc has a dedicated combination of products for pleasure boats, mega yachts and work boats.

Hydraulic Steering System from MT310 to MT1800

This type of servo system is using one or two main cylinders for generating the mechanical power for tacking and a dedicated cylinder for the power assistance for tacking management.

The working principle of the system is simple: As the steering wheel is turned, oil is sent from the helm pump to the servo cylinder. The cylinder makes a signal of pressure that is used to open a hydraulic distributor placed on the electro-hydraulic power unit. As the distributor opens, oil reaches the main cylinder moving the piston as well as the rod connected to the tiller arm. This causes the rudder to rotate.

This servo system is electrically operated and in case of electric failure, the system converts itself into a manual steering.

The hydraulic power units are available with one or two electric motors, both in direct current at 24 VDC and three-phase (different voltages on request). A dedicated solenoid valve for the autopilot interface is included on the electro-hydraulic power unit.

POWER-ASSISTED ELECTROHYDRAULIC POWER UNITS

APPLICATIONS AND TECHNICAL SPECIFICATIONS									
Model	Code	Main Cylinder Application	Servo Cylinder Application	Delivery in servo-control system	Delivery with autopilot	Setting Pressure	Max Power cons.	Motor nominal power	Tank capacity
C013APR-380	IT20595	CTD450 CTE600	CTC300A	6.9 l/min	6.9 l/min	63 bar	3.8 A	1500 W	32 l
C015AR-380	IT12505	2 x CTD310	CTC300A	8 l/min	8 l/min	55 bar	3.8 A	1500 W	32 l
C051D-380	IT18775	CTD310	CTC230A	5.2 l/min	5.2 l/min	63 bar	2 x 3.8 A	2 x 1500 W	50 l
C051E-380	IT19095	2 x CTD310	CTC300A	8 l/min	8 l/min	63 bar	2 x 3.8 A	2 x 1500 W	50 l
C051G-380	IT26218	CTD450 CTE600	CTC300A	6.9 l/min	6.9 l/min	63 bar	2 x 3.8 A	2 x 1500 W	50 l
C051M-380	IT31038	2 x CTE900	CTC400A	15 l/min	15 l/min	70 bar	2 x 4.5 A	2 x 1500 W	75 l
C051Q-380	IT31861	2 x CTD450 2x CTE600 CTE900 CTE1200	CTC300A	10.3 l/min	10.3 l/min	63 bar	2 x 3.8 A	2 x 1500 W	50 l

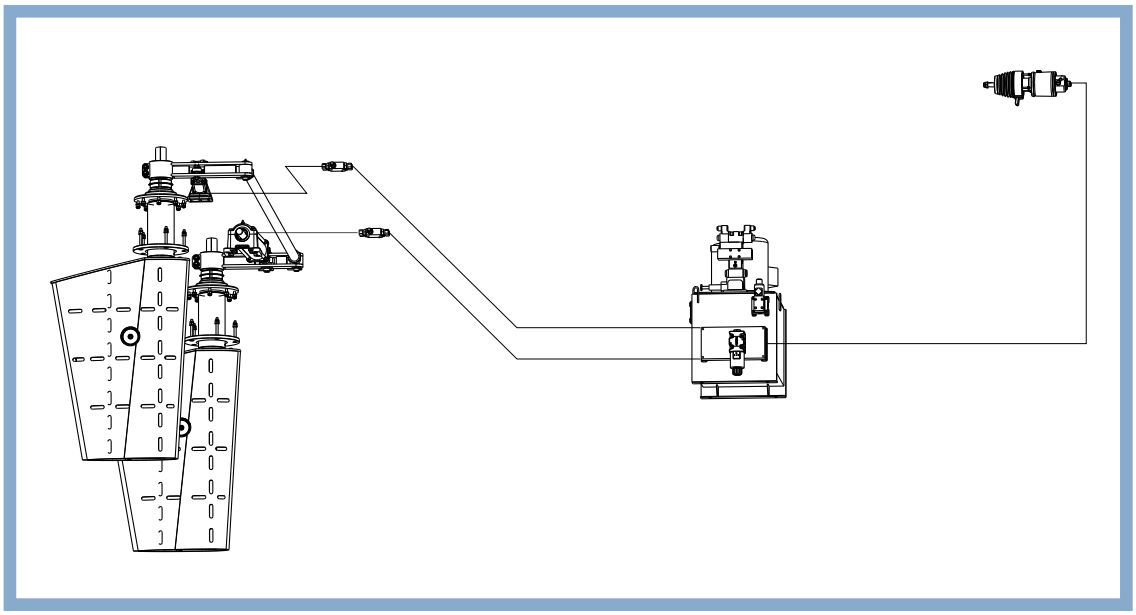

Hydraulic Steering System for Catamarans

Based on the servo assisted hydraulic steering system, the power assisted steering system for catamarans includes the addition of a second power assisted steering cylinder on the second rudder (one each rudder). This allows the same boat maneuvering as in a traditional power assisted steering system with all connected advantages, such as:

- reduced revolution of the steering wheel
- low-effort during maneuvering
- autopilot interface
- automatic filling of the system
- conversion to manual system in case of failure of the hydraulic power pack.

The synchronization of two rudders is guaranteed by a hydraulic bar that connects the two power assisted steering cylinders.

A system of valves and bypass allows to maneuver with one rudder in case of failure of a hydraulic cylinder.

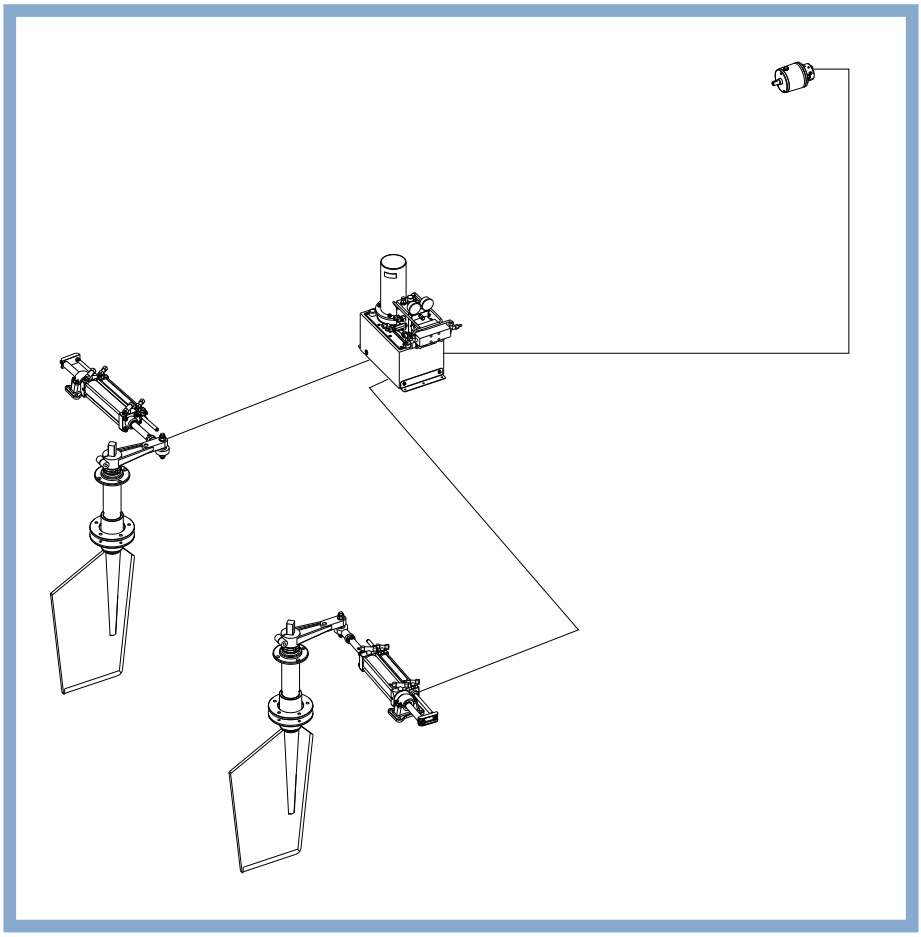

HYDROSTATIC STEERING SYSTEMS WITH ENGINE-DRIVEN PUMPS

Steering Pump Driven and Steering

In this type of steering system, hydraulic power is taken directly from the boat's propulsion package through hydraulic gear or axial piston pumps, depending on the power required by the system.

The hydraulic power generated arrives to the hydrostatic unit that, by turning the steering wheel right or left, sends oil under pressure to the cylinder chamber corresponding to the desired maneuver and receives oil from the discharge opposite chamber of the cylinder sending it to the oil tank.

The system is completed with valves for the autopilot, oil tank, oil filter, thermostat and level switch.

SYSTEMS SPECIFICATIONS								
Torque	Cylinder Model	Cylinder Volume (cc)	Hydrostatic Unit Volume (cc)	# of Wheel Turns	Hydraulic Pump Type	Connection Type	Absorbed Torque (Nm)	Tank Volume (L)
141	MT110	282	80	3.5	Gear	SAE A Z9 SAE A Z11 SAE B Z13	11	10
161	MT130	323	80	4.0				
180	MT145	361	80	4.5				
250	MT200	500	160	3.1				
285	MT230	570	160	3.6				
375	MT300	750	200	3.8				
421	MT310	844	200	4.2				
500	MT400	1000	320	3.1				
633	MT450	1266	320	4.0				
659	MT600	1318	320	4.1				
988	MT900	1978	630	3.1	Axial pistons	SAE B Z13	38	30
1318	MT1200	2637	630	4.2				

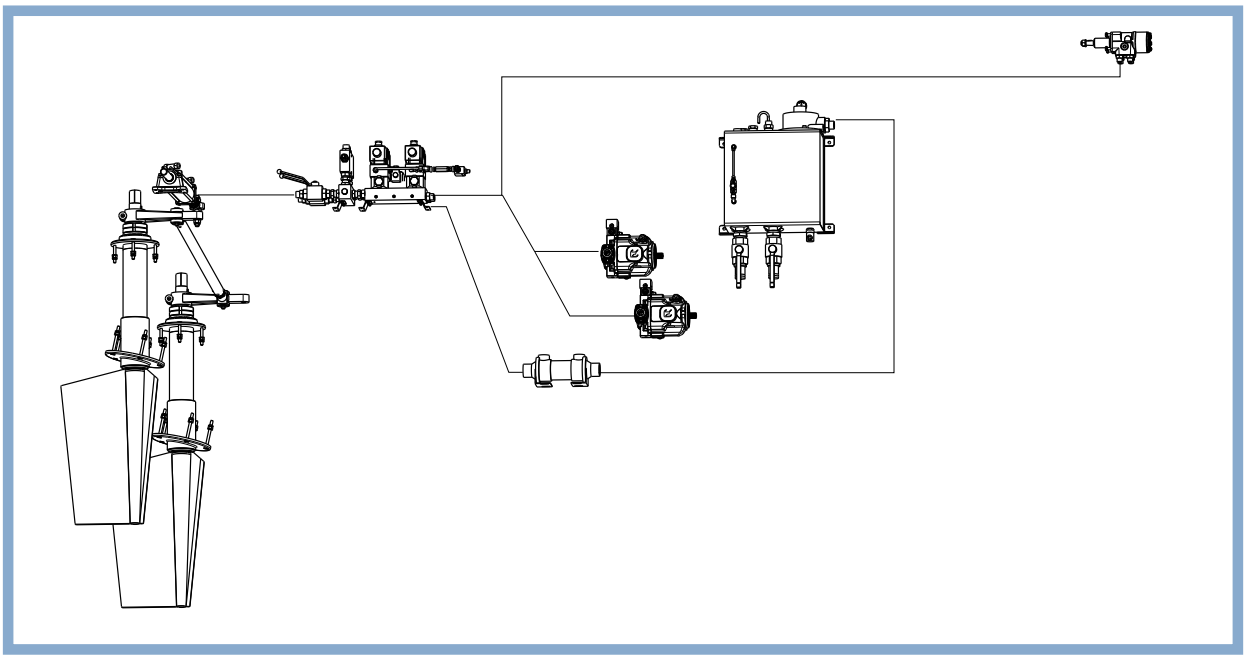

ACCESSORIES

Helm pumps and steering cylinders can be combined with several accessories to complete the system and maintain safety and control. It is possible to choose among many types of relief valves, non return and bypass valves, rudder angle indicator kits and fittings or hose kits for different configurations.

Each of the following sections contains a selection of our most popular and requested items. For any additional information or suggestion for a specific application, please contact the Twin Disc Technical Department.

NON RETURN VALVES

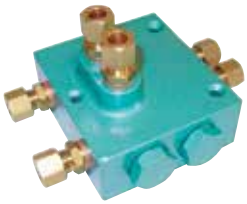

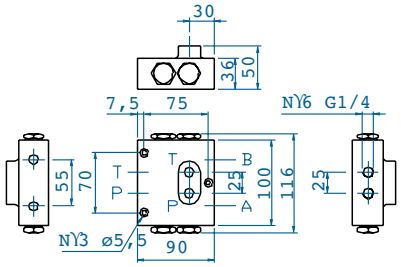

DOUBLE NON RETURN VALVE MOD. MT50 WITH FITTINGS d. 10	IT15706
DOUBLE NON RETURN VALVE MOD. MT50 WITH FITTINGS d. 12	IT17119
DOUBLE NON RETURN VALVE - THREADS G1/4" WITHOUT FITTINGS	IT15378

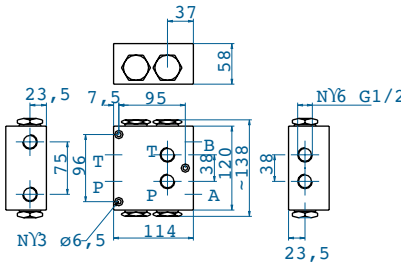

DOUBLE NON RETURN VALVE MOD. MT100 - FITTINGS d. 12	IT15708
DOUBLE NON RETURN VALVE MOD. MT100 - FITTINGS d. 1/2"	IT23504
DOUBLE NON RETURN VALVE MOD. MT100 - "PALPELLA" FITTINGS d. 14	IT15771
DOUBLE NON RETURN VALVE MOD. MT100 - "PALPELLA" FITTINGS d. 14 AND FITTINGS d. 12	IT23513
DOUBLE NON RETURN VALVE MOD. MT100 - FITTINGS D. 14	IT17673
DOUBLE NON RETURN VALVE MOD. MT100 - THREADS G3/8" WITHOUT FITTINGS	IT15380
DOUBLE NON RETURN VALVE MOD. MT100 - THREADS G1/2'' WITHOUT FITTINGS	IT31096

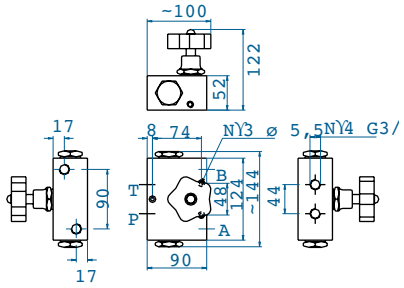

Bypass NON RETURN VALVE MOD. MT100 WITH FITTINGS d. 10	IT17120
Bypass NON RETURN VALVE MOD. MT100 WITH FITTINGS d.12	IT15707
Bypass NON RETURN VALVE MOD. MT100 WITH FITTINGS d. 14	IT17672
Bypass NON RETURN VALVE MOD. MT100 - "PALPELLA" FITTINGS d. 14	IT15770
Bypass NON RETURN VALVE MOD. MT100 THREADS G3/8" WITHOUT FITTINGS	IT15370

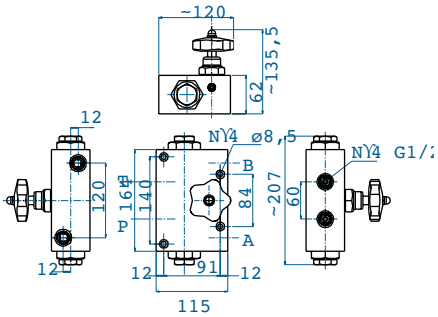

Bypass NON RETURN VALVE MOD. MT320 - "PALPELLA" FITTINGS d.14	IT17280
Bypass NON RETURN VALVE MOD. MT320 WITH FITTINGS d. 18	IT15709
Bypass NON RETURN VALVE MOD. MT320 - THREADS G1/2" WITHOUT FITTINGS	IT15372

CROSS RELIEF VALVE WITH G 3/8" THREADS - FITTINGS d.12	IT17042
CROSS RELIEF VALVE WITH G 1/2" THREADS - FITTINGS d.14	IT23021
CROSS RELIEF VALVE WITH G 1/2" THREADS - FITTINGS d.18	IT15659
CROSS RELIEF VALVE WITH d.12 THREADS - MALE FITTINGS G1/2"	IT23500
CROSS RELIEF VALVE WITH d.14 THREADS - MALE FITTINGS G1/2"	IT23501
CROSS RELIEF VALVE WITH d.18 THREADS - MALE FITTINGS G1/2"	IT23503
CROSS RELIEF VALVE G1/2" THREADS WITHOUT FITTINGS	IT31075
CROSS RELIEF VALVE G3/8" THREADS WITHOUT FITTINGS	IT31079

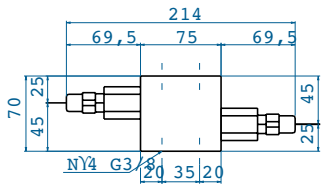

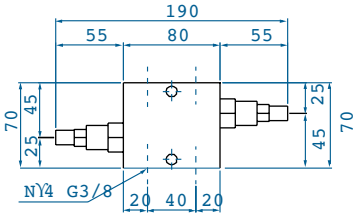

BYPASS

MANUAL BYPASS WITH 1/4” COCKS AND FITTINGS FOR D. 3/8” HOSE	IT23186
MANUAL Bypass WITH 1/4” COCKS AND FITTINGS FOR d. 10 HOSE	IT12216
MANUAL Bypass WITH 3/8” COCKS AND FITTINGS FOR d. 12 HOSE	IT16968
MANUAL Bypass WITH 3/8” COCKS AND FITTINGS FOR d. 1/2” HOSE	IT23480
MANUAL Bypass WITH 1/2” COCKS AND FITTINGS FOR d. 14 HOSE	IT23036
MANUAL Bypass WITH 1/2” COCKS AND FITTINGS FOR d. 18 HOSE	IT23037

BALL-COCK WITH LEVER

BALL-COCK WITH LEVER - 1/2” FEMALE - 1/2” FEMALE FITTINGS	IT14524
BALL-COCK WITH LEVER - 1/4” FEMALE - 1/4” FEMALE FITTINGS	IT14526
BALL-COCK WITH LEVER - 3/8” FEMALE - 3/8” FEMALE FITTINGS	IT14529

RUDDER ANGLE INDICATOR SET

Knowing the exact position of the rudder is very important to drive the boat safely. For this reason, the steering range contains a kit of rudder angle indicators and transmitters.

The set includes rudder angle indicators type San Giorgio SEIN having a range from 0° to +40°, as well as a kit of angle transmitters which is supplied with the lever mechanism and a ball joint together with a rod for connection to the tiller. It is a very simple and precise system for control of position.

Single-station rudder angle indicator kit	code IT13608
Double-station rudder angle indicator kit	code IT13609

FITTINGS

	Description	Code for Zinc Plated	Code for Brass	Code for Chromium Plated
	Seal kit and fittings for CTA cylinder bleeder			IT23048
	Seal kit and fittings for CTB cylinder bleeder			IT23049
	Seal kit and fittings for CTC cylinder bleeder			IT23050
	Seal kit and fittings for power-assisted CTA_A cylinder bleeder			IT23051
	Seal kit and fittings for power-assisted CTB_A cylinder bleeder			IT23052
	Seal kit and fittings for power-assisted CTC_A cylinder bleeder			IT23053
	Seal kit and fittings for CTAU and OB108-133 cylinder bleeder			IT23054
	Seal kit and fittings for CTBU cylinder bleeder			IT23055
	Seal kit and fittings for CTCU cylinder bleeder			IT23056
	Seal kit and fittings for power-assisted CTA_AU cylinder bleeder			IT23057
	Seal kit and fittings for power-assisted CTB_AU cylinder bleeder			IT23058
	Seal kit and fittings for power-assisted CTC_AU cylinder bleeder			IT23059
	Straight connection fitting G1/2” - G1/2”		IT21199	
	Straight connection fitting G3/8” - G3/8”		IT21198	
	Straight connection fitting d. 10 hose - d.10 hose			IT17038
	Straight connection fitting d. 12 hose - d.12 hose			IT12877
	Straight connection fitting d. 14 hose - d.14 hose	IT12879		
	Straight connection fitting d. 16 hose - d.16 hose	IT12880		
	Straight connection fitting d. 18 hose - d.18 hose	IT12881		
	Straight fitting G3/8” - d. 10 hose	IT12800	IT14358	
	Straight fitting G3/8” - d. 12 hose	IT12801	IT14359	IT12791
	Straight fitting G3/8” - d. 14 hose	IT12802	IT14360	
	Straight fitting G3/8” - d. 18 hose		IT14361	
	Straight fitting G3/8” - d. 1/2’’ hose		IT12809	
	Straight fitting G1/2” - d. 14 hose	IT12793	IT12808	
	Straight fitting G1/2” - d. 16 hose	IT12794		
	Straight fitting G1/2” - d. 18 hose	IT12795	IT14355	
	Straight fitting G1/4” - d. 10 hose		IT14356	
	Straight fitting G1/4” - d. 12 hose	IT16043		
	Straight fitting 1/4” NPTF - d. 1/2” hose		IT21077	
	Straight fitting 1/4” NPTF - d. 3/8” hose		IT12784	

	Description	Code for Zinc Plated	Code for Brass	Code for Chromium Plated
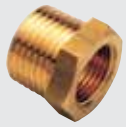	Reduction - G3/8” Male - G1/2” Female	IT12836		
	Reduction - G3/8” Male - G1/4” Female		IT12851	
	Reduction - G1/2” Male - G3/8” Female	IT12844	IT12839	
	Reduction - G1/4” Male - G3/8” Female	IT12848		IT12826
	Reduction - G1/2” Male - 1/4” NPTF Female		IT11211	
	Reduction - G1/4” Male - 1/4” NPTF Female		IT14352	
	Reduction - 1/4” NPTF Male - 3/8” NPTF Female		IT23546	
	Straight Reusable Fitting for R7 5/16” hose - d. 10		IT15610	
	Straight Reusable Fitting for R7 5/16” hose - d. 3/8”		IT15613	
	Straight Reusable Fitting for R7 3/8” hose - d. 12		IT15720	
	Straight Reusable Fitting for R7 3/8” hose - d. 1/2”		IT23477	
	Elbow Reusable Fitting for R7 5/16” hose - d. 3/8”		IT23476	
	Elbow Reusable Fitting for R7 5/16” hose - d. 10		IT15718	
	Elbow Reusable Fitting for R7 3/8” hose - d. 12	IT15721		
	Tee Fitting d.3/8” hose - 1/4”NPTF - d.3/8” hose		IT14734	
	Tee Fitting d.3/8” hose - 3/8”NPTF - d.3/8” hose		IT20837	
	Tee Fitting d.1/2” hose - 3/8”NPTF - d.1/2” hose		IT14733	
	Tee Fitting d. 10 hose - G 1/4’’ d.10 hose			IT14735
	Tee Fitting d.12 hose - G3/8” - d.12 hose			IT14750
	Tee Fitting d.18 hose - G1/2” - d.18 hose	IT22482		
	Tee Fitting d.10 hose - G1/4” - d.10 hose			IT14996+11795
	Elbow Fitting 1/4”NPTF - d.1/2” hose		IT20574	
	Elbow Fitting 1/4”NPTF - d.3/8” hose		IT11676	
	Elbow Fitting G1/4” - d.10 hose	IT11687		IT11678
	Elbow Fitting G1/4” - d.12 hose	IT11688		
	Equal Tee Fitting d.3/8” hose		IT21092	
	Equal Tee Fitting d.1/2” hose		IT21093	
	Equal Tee Fitting d.10 hose		IT14873	IT14874
	Equal Tee Fitting d.12 hose			IT14882
	Equal Tee Fitting d.14 hose	IT14877		
	Equal Tee Fitting d.18 hose	IT14878		

INTERNATIONAL DISTRIBUTORS

Asia
TWIN DISC (FAR EAST) PTE LTD
6, Tuas Avenue 1
Singapore 639491
Phone: (65) 6267 0800
Fax: (65) 6264 2080
Email: enquiry@twindisc.com.sg

Pacific Territories
TWIN DISC (PACIFIC) PTY LTD - BRISBANE
40 Telford Street
Virginia QLD 4014
Phone: +61 (7) 3265-1200
Fax: +61 (7) 3865-1371
Email: twindisc.brisbane@twindisc.com.au

Mailing Address:
PO Box 442
Virginia QLD 4014
Australia

North America
TWIN DISC SOUTHEAST INC.
8226 Phillips Highway
Jacksonville, FL USA 32256
Phone: +1 (904) 380-3196
Phone: +1 (888) 689-5355
Fax: +1 (904) 380-3197
Email: info@twindiscse.com
www.twindiscse.com

Latin America
TWIN DISC, INCORPORATED
3505 Lake Lynda Drive, Suite 200
Orlando, FL USA 32817
Phone: +1 (407) 574-3357

Europe, Middle East and Africa
TWIN DISC SRL
Via E. e P. Salani 1
50050 Limite Sull'Arno (FI)
Italy
Phone: +39 0571 979111
Fax: +39 0571 979143

For local distributors, please visit the Sales & Service Locator page at www.twindisc.com

WARRANTY CONDITIONS

See Company Literature page at www.twindisc.com for warranty information.

Photographs
Pubbli Photo
di Cinelli Silvano

All rights are reserved.
Any reproduction of this catalogue, even partial, is absolutely forbidden without a written authorization of the copyright owner.

Copyright © 2015 TWIN DISC

Due to constant improvement, technical specifications and dimensions can be modified without previous notice.

Printed August 2015

Via E. e P. Salani, 1 - 50050 Limite Sull'Arno (Fi) Italy - Tel. +39 0571 97911 Fax +39 0571 979143 - www.twindisc.com

Authorized dealer